Robin
DR 400 / 140B

Flug-
Handbuch

Airplane Serial:	1916
Airplane Regist. No.:	HB-KCJ
Revison:	5
Revision Date:	1.9.1989
Creation Date:	30.3.2017
Created by:	MFGL

FLUGHANDBUCH

DR 400/140 B

HB-KCJ S/N 1916

AVIONS ROBIN

MFGL

MOTORFLUGGRUPPE LANGENTHAL

LUFTFAHRZEUG - FLUGHANDBUCH (AFM)
MANUEL DE VOL DE L'AERONEF

für das Luftfahrzeug
pour l'aéronef HB - KCJ

Die den Betrieb des Luftfahrzeuges betreffenden Unterlagen sind vom Bundesamt für Zivilluftfahrt als Luftfahrzeug-Flughandbuch genehmigt oder anerkannt. Sie bilden eine Grundlage des Lufttüchtigkeitszeugnisses und dürfen nur durch das Bundesamt für Zivilluftfahrt oder in dessen Auftrag geändert werden.

Les documents relatifs à l'exploitation de l'aéronef sont approuvés ou reconnus par l'Office fédéral de l'aviation civile en tant que manuel de vol de l'aéronef. Ils forment une base du certificat de navigabilité et ne peuvent être modifiés que par l'Office fédéral de l'aviation civile ou sur son ordre.

Bei Aenderungen in der Ausrüstung ist dem Bundesamt für Zivilluftfahrt unverzüglich ein Arbeitsbericht im Doppel unter Angabe von Gewicht und Hebelarm der ein- und ausgebauten Teile zusammen mit dem vorliegenden Flughandbuch zuzustellen.

Lors de changements dans l'équipement, il y a lieu d'envoyer immédiatement à l'Office fédéral de l'aviation civile, avec le présent manuel de vol, un rapport de travail en deux exemplaires, et d'indiquer le poids ainsi que le bras de levier des parties installées ou déposées.

Das Luftfahrzeug darf nur nach diesem Flughandbuch, das an Bord mitzuführen ist, betrieben werden.

L'aéronef ne peut être exploité que d'après le présent manuel de vol, qui doit se trouver à bord.

Der Zulassungsbereich des Luftfahrzeuges ist im Anhang zum Lufttüchtigkeitszeugnis festgelegt.

Le champ d'utilisation de l'aéronef est fixé dans l'annexe du certificat de navigabilité.

3003 Bern, den
3003 Berne, le 07. AUG. 1989

BUNDESAMT FUER ZIVILLUFTFAHRT, Sektion Leichtluftfahrt
OFFICE FEDERAL DE L'AVIATION CIVILE, Section des aéronefs légers
i.A. / p.o.

BAZL 57.21 df - 2.87

Bemerkungen / Observations

2. Anzahl Personen an Bord
Nombre de personnes à bord

2.1 Mindestflugbesatzung * Equipage minimal de conduite	1 pilote			
2.2 Höchstzulässige Anzahl Passagiere Nombre maximal de passagers	3			

* Allfällige besondere Betriebsvorschriften bleiben vorbehalten
D'éventuelles prescriptions d'exploitation particulières restent réservées.

Hauptsächlichste Daten des Luftfahrzeuges
Données principales de l'aéronef HB - KCJ

1. Masse und Schwerpunktlage
Masse et position du centre de gravité

1.1 Höchstzulässige Abflugmasse
Masse maximale autorisée au décollage
Kat. / Cat. [N] * 1000 kg — lbs

* Andere Kategorien siehe Flughandbuch
Autres catégories voir manuel de vol

1.2 Höchstzulässige Landemasse
Masse maximale autorisée à l'atterrissage 1000 kg — lbs

1.3 Leermasse
Masse à vide

In der Leermasse sind inbegriffen:
Dans la masse à vide sont compris:

- ⊗ Ausrüstung gemäss Ausrüstungsliste / L'équipement selon la liste d'équipement
- ⊗ Nicht verwendbarer Treibstoff / Le carburant non utilisable
- ⊗ Nicht verwendbarer Schmierstoff / Le lubrifiant non utilisable
- ⊗ Verwendbarer Schmierstoff / Le lubrifiant utilisable
- ○ Hydraulikflüssigkeit / Le liquide hydraulique
- ○ Ballast (sofern eingebaut) / Lest (si installé)
- ○ Getriebeöl / Le lubrifiant de boîtes de transmission
- ○

Datum Date	Leermasse Masse à vide	Schwerpunktlage Position du centre de gravité	Leermasse-Moment Moment de la masse à vide	Zuladung Charge utile
	kg / lbs	m / in	mkg / in lbs	kg / lbs
19.07.89	599.0	0.330	198.26	401.0
15.11.92	601.	0.332	199.918	399.0
17.12.04	606.0	0.335	202.918	394.0
25.7.07	606.2	0,335	202.918	393.8
15.09.2008	606.31	0,3346	202.871	393,69
21.12.2010	610.05	0.315	~~192.36~~	389.95

Voir Rapp. Pesée 24.1.92

Stande C1260

Stande C1260

AIRLINE

FOCA FL / Hy

FOCA FL

CHRISTEN-AIRTECH AG TFR / FOCA-2647

SS, siehe Rückseite!

Datum Date	Leermasse Masse à vide	Schwerpunktlage Position du centre de gravité	Leermasse-Moment Moment de la masse à vide	Zuladung Charge utile
	kg / ~~lbs~~	m / ~~in~~	mkg / ~~in. lbs.~~	kg / ~~lbs~~
24.11.2011	603,62	0,342	206,183	396,3
03.03.2017	603.42	0,349	210.57	396.58

CLEARED
W/O
11/06/04

AVIONITEC AG
CH.145.018

FLUGHANDBUCH DR 400/140 B

FLUGZEUGMUSTER : DR 400/140 B

STAATSANGEHOERIGKEITS-
UND EINTRAGUNGSZEICHEN

HERSTELLER :

AVIONS PIERRE ROBIN
1 route de Troyes - 21121 DAROIS
FRANKREICH

BAUJAHR : WERK - NR
LUFTTUECHTIGKEITSGRUPPE : Nutzflugzeug-
Normalflugzeug

FLUGZEUGKENNBLATT

Dieses Flughandbuch gehört zu dem oben bezeichneten Flugzeug. Es ist stets im Flugzeug mitzuführen.
Die darin festgelegten Betriebsgrenzen sind sorgsamst einzuhalten.
Die Angaben dieses Handbuches sind dem "Manuel de Vol" für das Flugzeug DR 400/140 B entnommen.

BEHOERDE SICHTVERMERK

Ce manuel est une traduction en langue allemande comprenant toutes les indications du Manuel de Vol Français approuvé.

22 Novembre 1989.

Ingénieur Technicien d'Études et de Publications

DIRECTION GÉNÉRALE DE L'AVIATION CIVILE
SERVICE DE LA FORMATION AERONAUTIQUE ET DU CONTROLE TECHNIQUE

CARRETTE

Ausgabe 5 - Sept. 1989

ABSCHNITT O - ALLGEMEINES

INHALTSVERZEICHNIS

Verzeichnis der Nachträge..... 0.02

Verzeichnis der verwendeten Abkürzungen.. 0.04

Verzeichnis der Abkürzungen für
Funk und Funknavigation..... 0.05

Umrechnungsfaktoren..... 0.06

Umrechnungstabelle m.bar/in.Hg..... 0.07

REVISIONSLISTE

AEND.	BESCHREIBUNG	Geänd. Seiten N°	DATUM	DGAC SICHTVERMERK

REVISIONSLISTE

AEND.	BESCHREIBUNG	Geänd. Seiten N°	DATUM	DGAC SICHTVERMERK

VERZEICHNIS DER VERWENDETEN ABKUERZUNGEN

A	: Ampere
°C	: Grad Celcius (centigrade)
°F	: Grad Fahrenheit
Ft	: Fuss
HP	: PS
hPa	: Hectopascal
in.Hg	: Zoll Quecksilbersäule
kg	: Kilogramm
kt	: Knoten
l	: Liter
M	: Masse
m	: Meter
m.bar	: Millibar
m/s	: Meter pro Sekunde
Pa	: Ladedruck
U/mn	: Umdrehungen pro Minute
V	: Volt
VA	: Manövergeschwindigkeit
VC	: Konventionelle Geschwindigkeit
Vfe	: Hochzulässige Geschwindigkeit mit ausgefahrenen Klappen
VI (IAS)	: Angezeigte Geschwindigkeit
Vne	: Höchstzulässige Geschwindigkeit
Vno	: Maximale Reisegeschwindigkeit
Vp (TAS)	: Wahre Geschwindigkeit
Zp (DH)	: Druckhöhe

Falls nicht andersinne angedeutet, sind alle angegebenen Geschwindigkeiten dieses Flughandbuches angezeigte Geschwindigkeiten (IAS).

VERZEICHNIS DER ABKUERZUNGEN FUER FUNK UND FUNKNAVIGATION

ADF	:	Automatic Direction Finder System
ATC	:	Air Traffic Control
COM	:	Communications Transceiver
DME	:	Distance Measuring Equipment
ELT	:	Emergency Locator Transmitter
IFR	:	Instrument Flight Rules
ILS	:	Instrument Landing System
MKR	:	Marker Beacon Receiver
NAV	:	Navigations Indicators and Receivers
AUDIO	:	Audio Control
VFR	:	Visual Flight Rules
VHF	:	Very high Frequency
VOR	:	VHF Omnidirectional radio range

UMRECHNUNGSFAKTOREN

Feet	X 0,3048	=	Meter
Feet/Mn	X 0,00508	=	Meter/Sekunde
Gallons (US)	X 3,785	=	Liter
Gallons (imp)	X 4,546	=	Liter
Km/h	X 0,539	=	Knots
Knots	X 1,852	=	Km/h
Liter	X 0,264	=	US Gallons
Liter	X 0,220	=	Imp. Gallons
Meter	X 3,281	=	Feet
Meter/Sekunde	X 197	=	Feet/minute

UMRECHNUNG DES LUFTDRUCKS

Unter dem Druck in MILLIBARS oder in HECTOPASCAL ist der Druck in Zoll Quecksilbersäule angegeben.

-> m.bar oder hPa
-> in.Hg

950 28,05	960 28,35	970 28,64	980 28,94	990 29,23	1000 29,53	1010 29,63	1020 30,12	1030 30,42	1040 30,71
951 28,08	961 28,38	971 28,67	981 28,97	991 29,26	1001 29,56	1011 29,85	1021 30,15	1031 30,45	1041 30,74
952 28,11	962 28,41	972 28,70	982 29,00	992 29,29	1002 29,59	1012 29,88	1022 30,18	1032 30,47	1042 30,77
953 28,14	963 28,44	973 28,73	983 29,03	993 29,32	1003 29,62	1013 29,91	1023 30,21	1033 30,50	1043 30,80
954 28,17	964 28,47	974 28,76	984 29,06	994 29,35	1004 29,65	1014 29,94	1024 30,24	1034 30,53	1044 30,83
955 28,20	965 28,50	975 28,79	985 29,09	995 29,38	1005 29,68	1015 29,97	1025 30,27	1035 30,56	1045 30,86
956 28,23	966 28,53	976 28,82	986 29,12	996 29,41	1006 29,71	1016 30,00	1026 30,30	1036 30,59	1046 30,89
957 28,26	967 28,56	977 28,85	987 29,15	997 29,44	1007 29,74	1017 30,03	1027 30,33	1037 30,62	1047 30,92
958 28,29	968 28,58	978 28,88	988 29,18	998 29,47	1008 29,77	1018 30,06	1028 30,36	1038 30,65	1048 30,95
959 28,32	969 28,61	979 28,91	989 29,20	999 29,50	1009 29,80	1019 30,09	1029 30,39	1039 30,68	1049 30,98

ZUR ERINNERUNG : Der Standarddruck 1013,2 m.bar entspricht 29,92 in.Hg.

ABSICHTLICH LEERGELASSENES BLATT

ABSCHNITT 1 - BESCHREIBUNG

INHALTSVERZEICHNIS

Abmessungen..... 1.03

Tragflügel..... 1.03

Querruder..... 1.03

Landeklappen..... 1.04

Höhenleitwerk..... 1.04

Seitenleitwerk..... 1.04

Fahrwerk..... 1.04

Triebwerk..... 1.05

Propeller..... 1.06

Kraftstoffsystem..... 1.07

Kraftstoff..... 1.08

Oel..... 1.08

Instrumentenbrett..... 1.10

Heizung und Lüftung..... 1.12

Elektrische Anlage..... 1.13

Standard Ausrüstungsverzeichnis..... 1.15

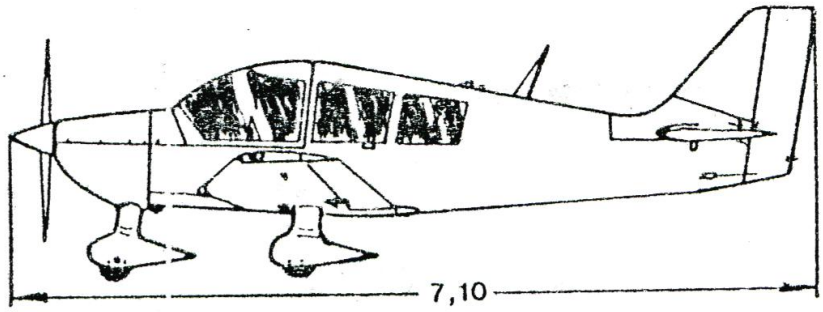
7,10

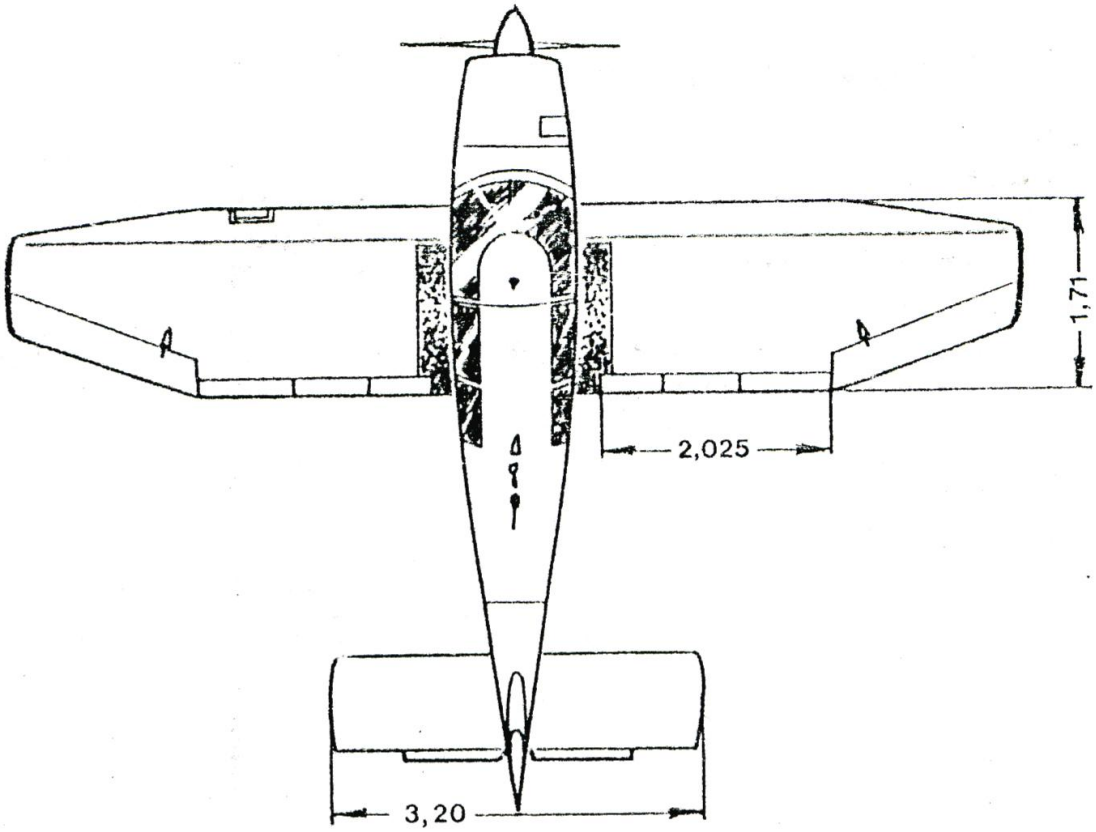
1,71
2,025
3,20

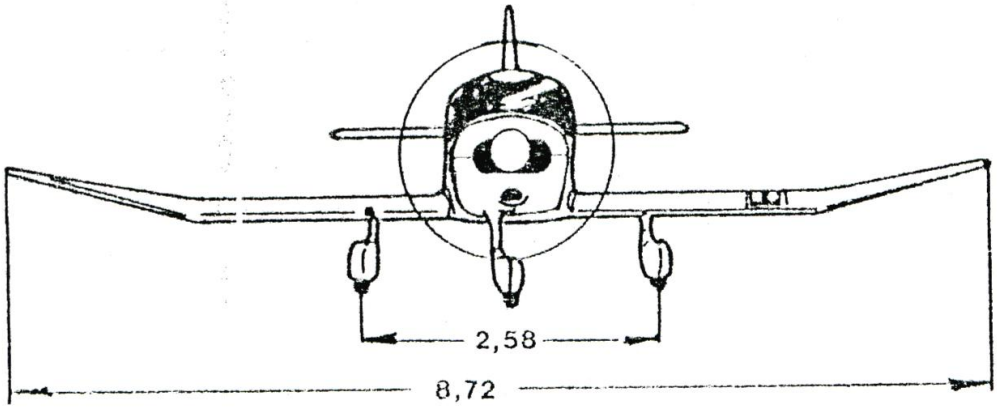
2,58
8,72

ALLGEMEINE ABMESSUNGEN

Spannweite..... 8.72 m
Gesamtlänge..... 7.10 m
Grösste Höhe..... 2.23 m
Bodenfreiheit der Luftschraube ..... 0,280 m

INNENABMESSUNG DER KABINE

Länge..... 1.62 m
Breite..... 1.10 m
Höhe..... 1.23 m
4 Sitze, Zugang von beiden Seiten durch Schiebehaube.
Volumen des Gepäckraums..... 0.37 m3

TRAGFLUEGEL

Tragende Fläche..... 13.60 m2
Profil..... NACA 43013,5 verändert
Streckung..... 5.35
V.Stellung..... 14°

QUERRUDER

Fläche pro Ruder..... 0.57 m2
Spannweite pro Ruder..... 1.62 m

Das Höhenruder ist teilweise statisch ausgeglichen.

LANDEKLAPPEN

Fläche pro Klappe..... 0.33 m2
Spannweite pro Klappe..... 2.025 m

HOEHENLEITWERK

Gesamtfläche..... 2.88 m2
davon Fläche des Hilfsruders 0.26 m2
Spannweite..... 3.20 m

SEITENLEITWERK

Gesamtfläche..... 1.63 m2
Fläche der Seitenflosse..... 1 m2
Fläche des Ruders..... 0.63 m2

FAHRWERKE

AUSFUEHRUNG FESTES DREIBEINFAHRWERK

Spurweite..... 2.58 m
Radstand..... 1.65 m
Radabmessungen ..... 380 x 150

Oelsorte für Federbein : SHELL fluid 4
BP Hydraulic 1 (Aéro)

Bugfahrwerk

Radluftdruck..... 1,8 bars
Federbeinöldruck..... 4,5 bars
Federweg..... 130 mm

Hauptfahrwerk

Radluftdruck..... 2 bars
Federbeinöldruck..... 6 bars
Federweg..... 160 mm

BREMSEN

Die hydraulischen Scheibenbremsen besitzen für jedes Hauptfahrwerkrad voneinander getrennte ölhydrauliksteuerleitungen.

Bremsflüssigkeit..... MIL.H.5606-A

TRIEBWERK :

Motor

Hersteller..... LYCOMING
Type..... O-320-D2A
Zahl der Zylinder..... 4
Normalbetriebshöchstdrehzahl..... 2500 U/Mn

LUFTSCHRAUBE :

MARKE	SENSENICH	SENSENICH	SENSENICH
TYPE	74DM6S5260	M74DMS264 oder 74DM6S5264	74DMS-0-64 oder 74DM6S5064
DURCHMESSER	1,83 m	1,83 m*	1,88 m
STEIGUNG	60"	64"	64"
MINDEST-DREHZAHL am Boden bei VOLLGAS in MEERESH.	2300 U/Mn	2200 U/Mn	2200 U/Mn

ANMERKUNG :

* Jede Durchmesserverkürzung zwecks Reparatur untersagt.

SCHEMA DER KRAFTSTOFFANLAGE

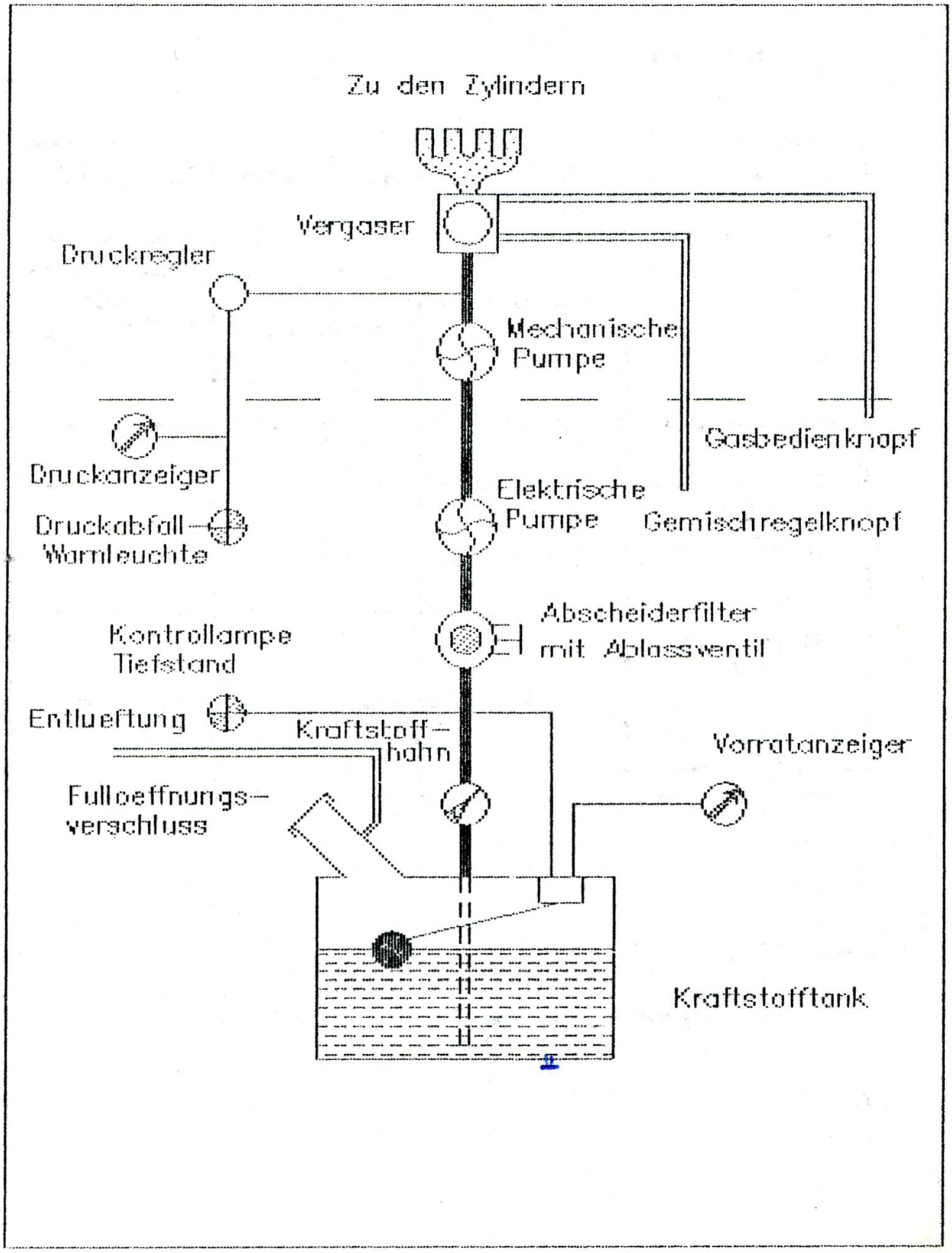

KRAFTSTOFF

Flugbenzin..... AVGAS 100 LL
Oktanzahl..... 100 mini

Maximaler Tankinhalt..... 110 l
Insgesamt ausfliegbare Menge..... 100 l
Nicht ausfliegbar..... 10 l

ANMERKUNG :

Wahlweise kann die Gesamtvorratsmenge der Kraftstoffbehälter auf 160 l erhöht werden (nutzbare Menge 150 l)

OELSORTEN

Für die 50 ersten Betriebsstunden : Reines Mineralöl. Nach 50 Betriebsstunden : Legiertes Oel

OELQUALITATEN

über 15°C..... SAE 50
von 0°C bis 30°C..... SAE 40
von -15°C bis +20°C..... SAE 30
unter -10°C..... SAE 20

Gesamtfassungsvermögen..... 7,5 l
Mindestmenge..... 5,7 l

ABSICHTLICH LEERGELASSENES BLATT

INSTRUMENTENBRETT

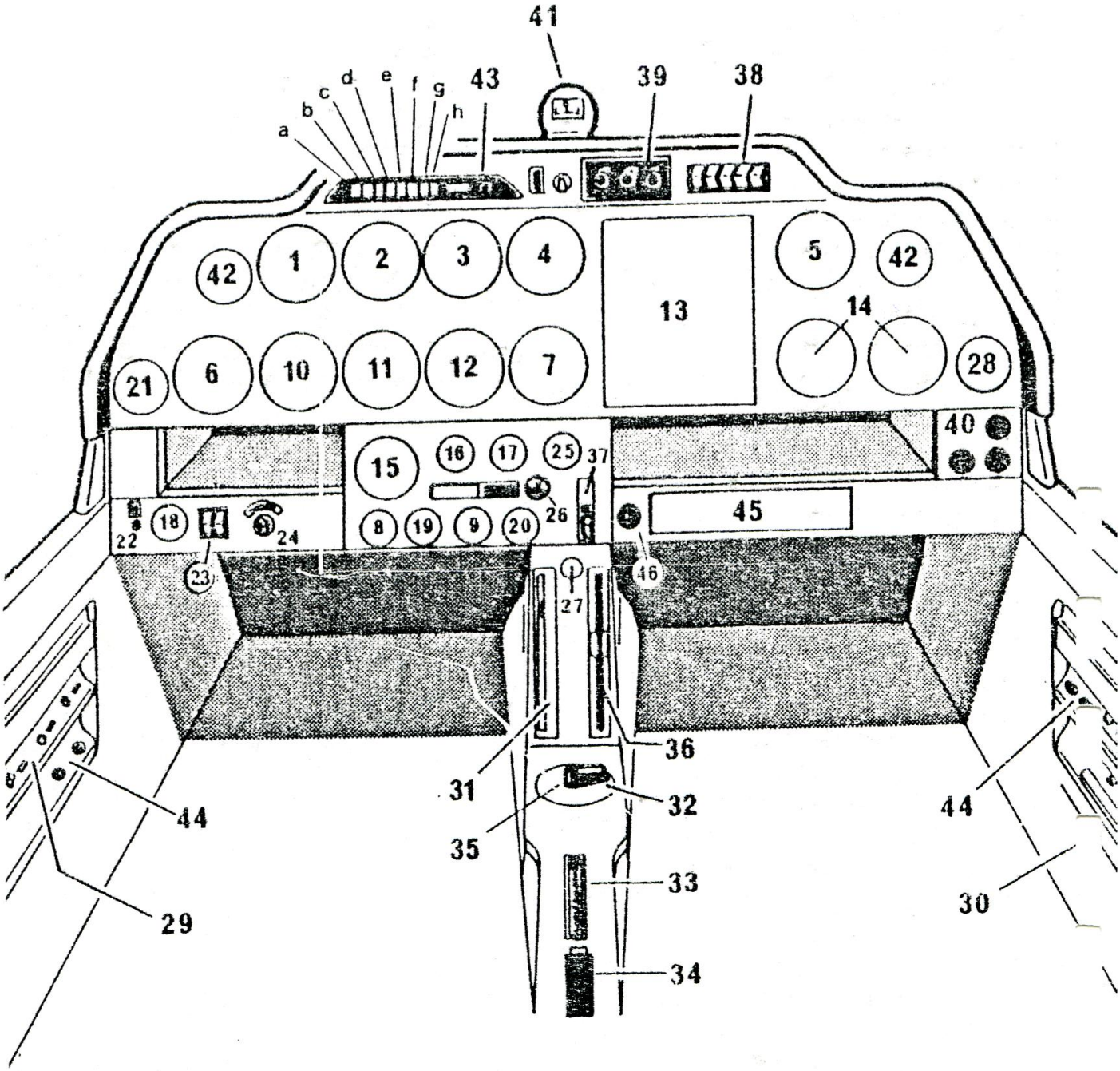

1..... Fahrtmesser
2..... Künstlicher Horizont
3..... Höhenmesser
4 - 8. Funk oder Zusatzausrüstungen
9..... Haupttank
10.... Wendezeiger oder Libelle
11.... Kurskreizel
(Autopilotbediengerät : wahlweise)
12.... Variometer
13,14. Funkausrüstung
15.... Drehzahlmesser
16.... Oeldruckmesser
17.... Oeltemperaturemesser
18.... Voltmeter
19.... Zusatzausrüstungen
oder Zusatztank
20.... Kraftstoffdruck
21.... Unterdruckanzeiger
22.... Sicherungsautomaten
23.... Wechselstromgenerator
24.... Zündung Wahlschalter
25.... Zusatzausrüstung
26.... Vergaservorwärmknopf
27.... Parkbremsknopf
28.... Aussenlufttemperaturanzeiger
29.... Sicherungsautomaten
30.... Schmelzsicherungen
31.... Trimmanzeiger
32.... Anlasserknopf (abgedeckt beim
Kraftstoffhahn auf Einziehstellung)
33.... Höhenruddertrimmklappe
34.... Klappen Bedienhebel
35.... Kraftstoffhahn
36.... Gemischregelknopf
37.... Anlasseinspritzpumpe Schalter
38od45 Schalter
39od45 Beleuchtungsdimmer
40.... Bedienknöpfe für
Kabinenbelüftung und Heizung
41.... Magnetkompass
42.... Aerator
43.... Warnleuchten
a. Oeldruck
b. Kraftstoffdruck
c. Kraftstoffvorrat
d. Ladestrom
e. Anlasser
f. Klappen aus
g. Pitotheizung (wahlweise)
h. Schlepphaken (wahlweise)
44.... Funkstecker
45.... Funkgerät oder Zusatzausrüstung
46.... Zusatztankhahnhandzug (wahlweise)

HEIZUNG UND LUEFTUNG

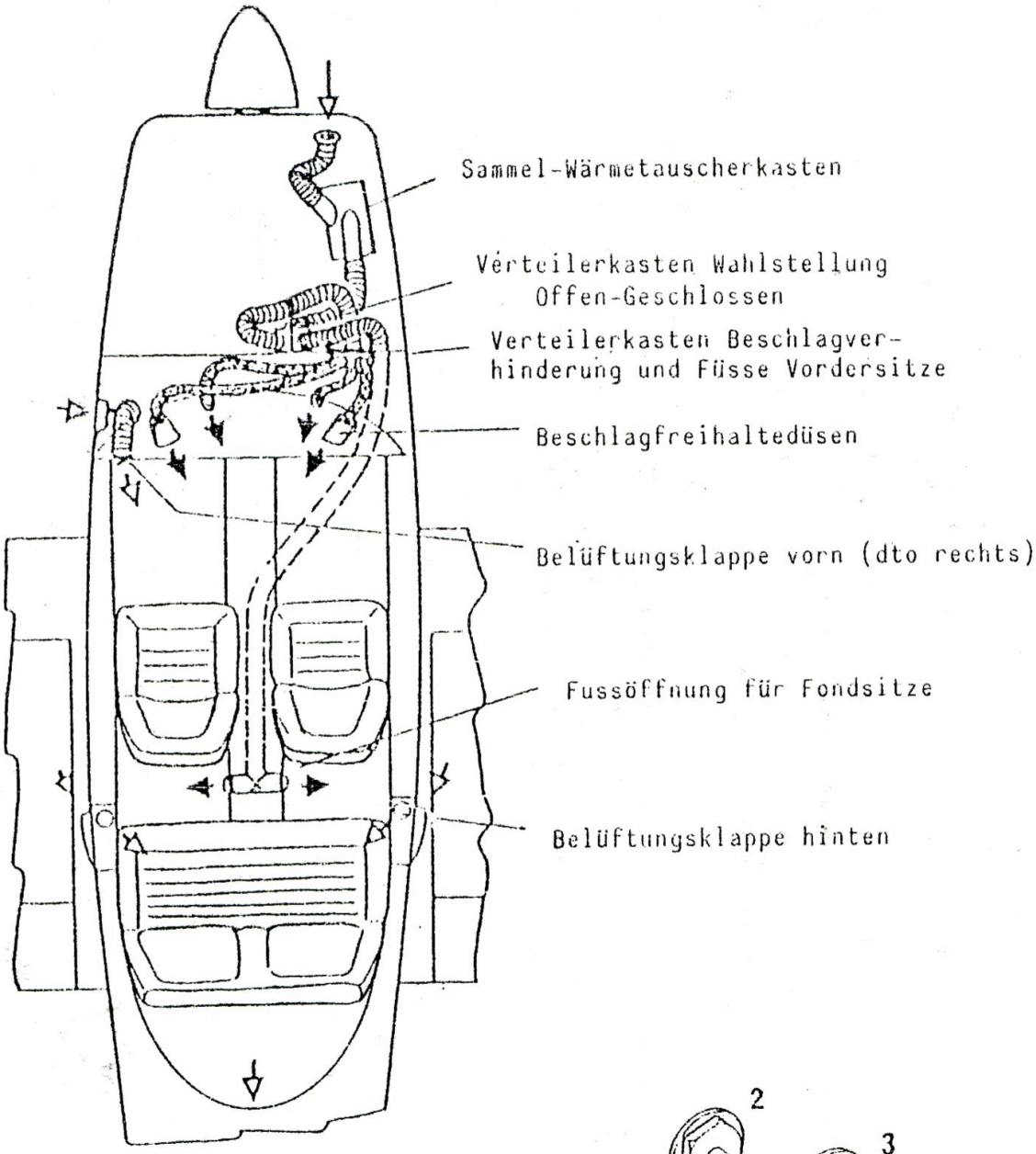

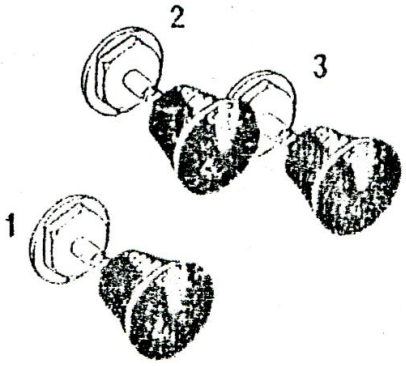

SCHEMA DER ELEKTRISCHEN ANLAGE

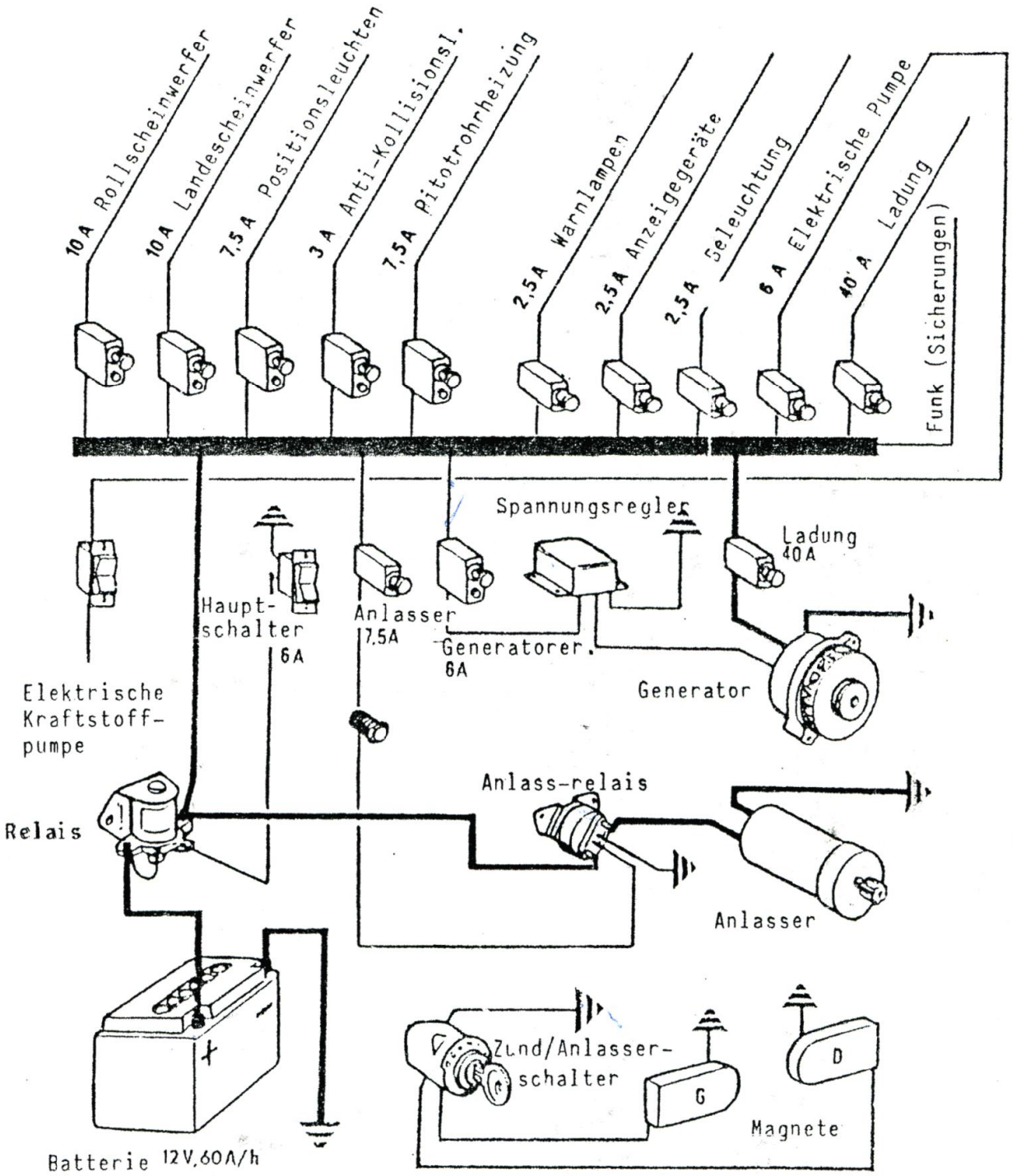

STANDARD AUSRUESTUNGSVERZEICHNIS

BENENNUNG	MENGE	HERSTELLER	TEILNUMMER	
Triebwerkgerüst	1	A.P.R	51.26.10	
Warnleuchten	8	L.K.L	EL09A	
Kraftstoffhahn	1	LE BOZEC	53049 bis	
Ablassknöpfe	2	LE BOZEC	56.077	
Kraftstofffilter	1	LE BOZEC	A 6196	
Elektrische Kraftstoffpumpe	1	FACET	474 A	
Hauptfahrwerk Links	1	A.P.R.	41.26.01	
Hauptfahrwerk Rechts	1	A.P.R.	41.26.02	
Bugfahrwerk	1	A.P.R.	41.26.001	
Gurtzeuge mit Einroll.	2	ANJOU AERO	H3 + 343-1	
Oelkühler	1	N.D.M.	2002 A	
Propeller	1	SENSENICH	74DM6S5260	
Magnetkompass	1	AIRPATH	C 2400	
Höhenmesser	1	U.I.	5934 M-1	
Wendezeiger	1	MID-CONTIN.	1394-T100	
Fahrtmesser	1	SIGMA	5171-01 5171-03	
Variometer	1	U.I.	7000	

BENENNUNG	MENGE	HERSTELLER	TEILNUMMER	
Drehzahlmesser	1	MITCHELL	98480-25	
Batterie 12 V	1	SONNENSHEIM	6MK5	
Spannungsregler + Relais	1	J.P.C.	614170	
Triebwerk	1	LYCOMING	0320-D2A	
Tank 110 L	1	A.P.R.	52.26.60	
Zündungwahlschalter	1	BENDIX	10-35/290-1	
Voltmeter	1	JAEGER	312-272-01	
Oeldruckmesser	1	JAEGER	089-060-02	
Oeldruckgeber	1	JAEGER	31355001L3	
Kraftstoffdruckgeber	1	JAEGER	68.651-12	
Tank-Vorratsmesser	1	JAEGER	083.093.01	
Flüssigkeitsstandanzeiger	1	JAEGER	089.027.02	
Oeltemperaturfühler	1	JAEGER	74-127	
Oeltemperaturstandanzeiger	1	JAEGER	089.470.02	
Schmelzsicherungen	12	CEHESS		
Schmelzsicherung 40 A	1	E.T.A.	413K14LN2	
Ueberziehwarnanzeiger	1	SONALERT	SC 628 P	
Ueberziehwarnsensor	1	A.P.R.	798800	

ABSICHTLICH LEERGELASSENES BLATT

ABSCHNITT 2 - BETRIEBSGRENZEN

INHALTSVERZEICHNIS

Zulassungsbasis..... 2.03

Betriebsart..... 2.03

Geschwindigkeitgrenzen..... 2.03

Farbmarkierungen am Fahrtmesser..... 2.03

Sichere Lastvielfache beim zulässigen Höchstgewicht..... 2.04

Gewichte und Schwerpunktlagen..... 2.04

Beladungsgrenzen..... 2.05

Beladeplan..... 2.05

Betriebsgrenzen des Triebwerkes..... 2.06

Hinweisschilder..... 2.07

Beschränkende Einsatzbedingungen..... 2.09

ABSICHTLICH LEERGELASSENES BLATT

ZULASSUNGSBASIS

Das Flugzeug DR 400/140 B ist zugelassen (19.11.75) in der Kat. "NORMAL" und "NUTZ-FLUGZEUG" entsprechend den Bauvorschriften

- Allgemeine Bestimmungen der Vorschriften AIR 2052, ergänzt am 6. Juni 1966.
- Zulätzliche Bestimmungen zur Anspannung an FAR 23 - Amdt 7.
- Besondere Bestimmung hinsichtlich des Haubenabwurfs.

BETRIEBSART

Sichtflug bei Tag nicht unter Vereisungsbedingungen.

GRENZGESCHWINDIGKEIT (IAS)	km/h - kt
Vne Zulässige Höchstgeschwindigk.	308 - 166
Vno Maximale Reisegeschwindigkeit	260 - 140
VA Manövriergeschwindigkeit	215 - 116
Vfe Maximale Geschwindigkeit bei ausgefahrenen Klappen	170 - 92

MARKIERUNG AUF DEM FAHRTMESSER		km/h	kt
Roter radial Strich	Vne	308	166
Gelber Bogen (Achtungsbereich)	Vno Vne	260-308	140-166
Grüner Bogen (Normaler Einsatzbereich)	Vs1 Vno	99-260	53-140
Weisser Bogen (Flügel-Klappenbetriebsbereich	Vso Vfe	87-170	47-92

ZULAESSIGE LASTVIELFACHE BEI MAXIMALER ABFLUGMASSE

910 Kg (Kat."U")

. Bei eingefahrenen Klappen :
n zwischen +4,4 und -2,2
. Bei ausgefahrenen Klappen : n = +2

1'000 Kg (Kat."N")

. Bei eingefahrenen Klappen :
n zwischen +3,8 und -1,9
. Bei ausgefahrenen Klappen : n = +2

MAXIMAL ZULAESSIGE MASSE

	Kat."U"	Kat."N"
. Beim Start.....	910 Kg	1000 Kg
. Beim Landen.....	910 Kg	1000 Kg

SCHWERPUNKTSLAGEN

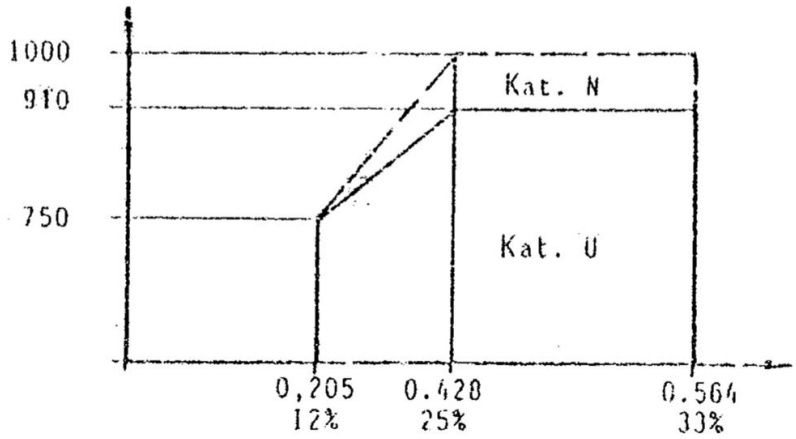

. Nivelierung : Horizontale Bezugslinie (Oberer Längsstringer des Rumpfes)
. Bezugspunkt für Schwerpunktlage : Flügvorderkante Rippe 6)
. Bezugsflügeltiefe : 1,71 m

BELADEPLAN

(Siehe auch Abschnitt 6 - Ladediagramm)

Das im Triebwerk enthaltene Oelgewicht,sowie der nicht nutzbare Kraftstoffanteil sind im Leergewicht der Maschine mit einzubeziehen.

	Masse (Kg)	Hebelarm (m)
Vordersitze...	2 x 77	0,36 - 0,46
Hintere Sitze (*).	2 x 77	1,19
Kraftstoff	80	1,12
Gepäck (**)..	40	1,9

(*) Die Beförderung von mehr als nur 2 Fluggästen (von einem kleineren bis gleichgrossen Gesamtgewicht wie das vorstehend angegebene Höchstgewicht) ist auf dem Fondsitz unter dem Vorbehalt zulässig, dass eine der Gastanzahl entsprechende Stückzahlanschnallvorrichtungen besteht und die Gewichts- und Zentrierungsgrenzen eingehalten sind.

(**) In den zulässigen Massen- und Schwerpunktgrenzen.

BETRIEBSGRENZEN DES TRIEBWERKES

Max. Dauerbetätigung des Anlassers..... 30 Sek.
Max. Drehzahl..... 2500 UpM
Zylinderkopftemperatur
max.....260 °C (roter Strich)

MARKIERUNGEN AN DREHZAHLMESSERSKALA

- Grüner Bogenbereich..... 2000 - 2500 UpM
- Rote Strichmarkierung bei..... 2500 UpM

OELSORTEN

Oeltemperatur max..... 118 °C (roter Strich)
Normaltemperatur..... 40-118 °C (grüner Bogen)
Oeldruck normal.... 4,5-6,3 bars (grüner Bogen)
Mindestöldruck im Leerlauf
.....1,75 bar (roter Strich)
Oeldruck max..... 6,9 bars (roter Strich)
Oelmenge..... 7,6 l
Oelsorte siehe Seite 1.08

KRAFTSTOFFQUALITAET

Flugbenzin..... AVGAS 100 LL
Betriebsdruck ..... 35 - 550 m.bar
Kraftstoffvorratmenge..... 110 l

BELADUNGSGRENZDATEN

Anzahl Insassen : . Vordersitze : 2
. Hintere sitze: 2
Siehe Seite 2.05
Gepäck : Max. zulässiges Masse im Gepäckraum
..... 40 Kg

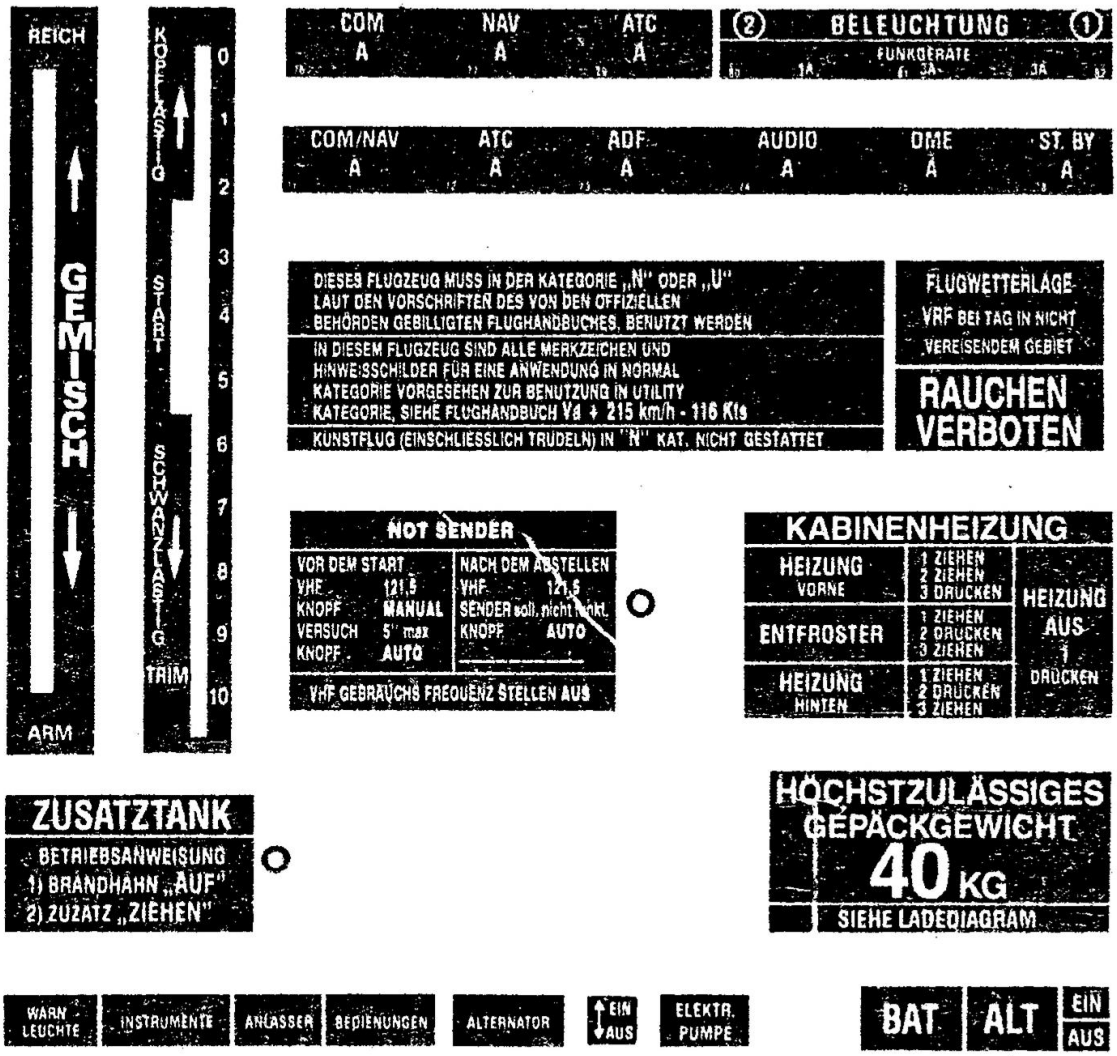
REICH
GEMISCH
ARM
KOPFLASTIG
START
SCHWANZLASTIG
TRIM
0 1 2 3 4 5 6 7 8 9 10
COM A
NAV A
ATC A
BELEUCHTUNG
FUNKGERÄTE
COM/NAV A
ATC A
ADF A
AUDIO A
DME A
ST. BY A
DIESES FLUGZEUG MUSS IN DER KATEGORIE „N" ODER „U" LAUT DEN VORSCHRIFTEN DES VON DEN OFFIZIELLEN BEHÖRDEN GEBILLIGTEN FLUGHANDBUCHES, BENUTZT WERDEN
IN DIESEM FLUGZEUG SIND ALLE MERKZEICHEN UND HINWEISSCHILDER FÜR EINE ANWENDUNG IN NORMAL KATEGORIE VORGESEHEN ZUR BENUTZUNG IN UTILITY KATEGORIE, SIEHE FLUGHANDBUCH Va + 215 km/h - 116 Kts
KUNSTFLUG (EINSCHLIESSLICH TRUDELN) IN "N" KAT. NICHT GESTATTET
FLUGWETTERLAGE
VRF BEI TAG IN NICHT VEREISENDEM GEBIET
RAUCHEN VERBOTEN
NOT SENDER
VOR DEM START
VHF 121,5
KNOPF MANUAL
VERSUCH 5" max
KNOPF AUTO
NACH DEM ABSTELLEN
VHF 121,5
SENDER soll nicht funkt.
KNOPF AUTO
VHF GEBRAUCHS FREQUENZ STELLEN AUS
KABINENHEIZUNG
HEIZUNG VORNE
1 ZIEHEN 2 ZIEHEN 3 DRÜCKEN
ENTFROSTER
1 ZIEHEN 2 DRÜCKEN 3 ZIEHEN
HEIZUNG HINTEN
1 ZIEHEN 2 DRÜCKEN 3 ZIEHEN
HEIZUNG AUS
DRÜCKEN
ZUSATZTANK
BETRIEBSANWEISUNG
1) BRANDHAHN „AUF"
2) ZUSATZ „ZIEHEN"
HÖCHSTZULÄSSIGES GEPÄCKGEWICHT
40 KG
SIEHE LADEDIAGRAM
WARN LEUCHTE
INSTRUMENTE
ANLASSER
BEDIENUNGEN
ALTERNATOR
EIN AUS
ELEKTR. PUMPE
BAT
ALT
EIN AUS
ZU
ANLASSER
AUF
BENZIN 100 L
PARK BREMSE
1 2 3

O Wahlweise

MIKRO KOPFHÖRER

VERGASER VORWÄRMUNG ZIEHEN

ZUSATZTANK KNOPF ZIEHEN O

AUF DIESE FLÄCHE NICHTS ABLEGEN O

PARK BREMSE
PARK BREMSE: auf beide Pedalen drücken und dann Hebel ziehen.
ZUM LÖSEN: Hebel drücken.

SCHIEBEDACH
ZU
AUF

ZUSATZ TANK
50 L O

HINTER TANK
110 L
0 1 2 3 4
0 35 80 140 160
Liter

ACHTUNG
12 V O

ACHTUNG
BREMSE ÖL
SHELL Fluid 4
BP Hydraulic 1

NOTSENDER O

HAUBENABWURF - ZIEHEN

→ ZU

AUF

AVGAS 100 LL
110L.

AVGAS 100 LL
50 L.

HAUPTFAHRWERK	
REIFEN DRUCK	= 2 BAR
STOSSDAEMFER	= 6 BAR

BUGRAD	
REIFEN DRUCK	= 1,8 BAR
STOSSDAEMFER	= 5 BAR

NICHT ANFASSEN

NICHT BETRETEN

O Wahlweise

LUFTTUECHTICHHEITSGRUPPE "U"

Die Lufttüchtigheitsgruppe "U" (Nutzflugzeuge), umfasst nachstehende Flugmanöver :

- Steilkurven (60°)
- "Lazy eight"
- Kurve im dynamischen Steigflug
- Ueberziehen

Vorstehende Steuermanöver sind unter nachstehenden Bedingungen auszuführen :

Hintere Sitze müssen unbesetzt sein.

Ein- und Ausleitgeschwindigkeiten müssen in den Bereichsgrenzen des Normaleinsatzes liegen.

ABSICHTLICH LEERGELASSENES BLATT

ABSCHNITT 3 - NOTVERFAHREN

INHALTSVERZEICHNIS

Triebwerksausfall beim Start..... 3.02

Triebwerksausfall unmittelbar
nach dem Abheben..... 3.02

Triebwerkausfall im Flug..... 3.03

Notlandung auf freiem Feld mit
ausgefallenem Triebwerk..... 3.03

Sicherheitslandung auf freiem Feld
bei laufendem Triebwerk..... 3.04

Feuer..... 3.04

Vibrationen und unregelmässiger
Motorlauf..... 3.06

Störung im Schmierstoffsystem..... 3.06

Vereisung..... 3.07

Ausfall oder Störung der Stromerzeugung.. 3.08

Unbeabsichtiges Trudeln..... 3.08

Ausfall des Höhenruders..... 3.09

TRIEBWERKAUSFALL BEIM START (beim Rollen)

Wenn ausreichende Stoppstrecke zur Verfügung steht :

- Gas ganz zurücknehemen, und durch entsprechendes Bremsen Flugzeug geradeaus zum Stehen bringen.

Wenn kein ausreichender Stoppweg zur Verfügung steht :

- Gas ganz zurücknehmen
- Voller Bremseinsatz
- Gemisch.....Schnellstop
- Brandhahn..... zu
- Hauptschalter..... aus
- Zündschalter..... aus

TRIEBWERKAUSFALL UNMITTELBAR NACH DEM ABHEBEN

- Gleitfluggeschwindigkeit
  Klappen in Startstellung..... 135 km/h-73 kt
- Gemisch..... ..... Schnellstop
- Brandhahn..... zu
- Zündung..... aus
- Hauptschalter ..... aus

WICHTIGER HINWEIS

- Notlandung gerade voraus durchführen mit nur kleinen Kursänderungen, um Hindernis-auszuweichen.

- Niemals versuchen, auf die Landebahn zurückzukurven, da die Höhe nach dem Start gewöhnlich nicht ausreicht.

TRIEBWERKAUSFALL IN FLUG

Wenn die Höhe für einen Wiederstart des Triebwerks für ausreichend gehalten wird :

- Geschwindigkeit des besten Gleitens einnehmen bei eingefahrenen Landeklappen (145 km/h - 78 kt). (Unter diesen Bedingungen und ohne Wind legt das Flugzeug ungefähr das 9,3 Fache der Flughöhe zurück).

- Brandhahn..... auf
- Elektrische Kraftstoffpumpe..... ein
- Gemisch..... voll reich
- Gashebel.....2 bis 3 cm nach vorn schieben
- Zündschalter..... auf "Both"

Falls die Luftschraube sich noch dreht, müsste der Motor anspringen.
Wenn die Luftschraube steht, den Anlasser betätigen.
Falls der Motor immer noch nicht anspringt, Aussenlandung entsprechend untenstehendem Verfahren vorbereiten.

NOTLANDUNG MIT AUSGEFALLENEM TRIEBWERK

Geeignetes Landefeld wählen :

- Bauch- und Schultergurte..... angezogen
- Elektrische Kraftstoffpumpe..... aus
- Gemisch..... Schnellstop, voll ziehen
- Gashebel..... Leerlauf (ziehen)
- Zündschalter..... aus
- Brandhahn..... zu
- Generatorerregung..... aus

Beim Einflug in das Endteil Haube entriegeln.

Endteil

- Landeklappen..... voll ausfahren
- Hauptschalter..... aus

VORSORGLICHE AUSSENLANDUNG MIT BETRIEBS FAEHIGEM MOTOR

Das gewählte Landefeld in Augenschein nehmen durch je nach Bedarf, mehrere Uberflüge mit geringer Geschwindigkeit (130 Km/h-70 Kt) bei eingefahrenen Landeklappen. Dann Anflug mit 120 Km/h-65 Kt Landeklappen in Landestellung durchführen.
Im Endteil die Haube entriegeln.

Vor der Bodenrührung :
- Zündung..... aus
- Hauptschalter..... aus

ANMERKUNG
BEI BLOCKIERTE SCHIEBEHAUBE

- Haubengriff in Stellung "Offen"
- Die beiden Hebel für den Haubennotabwurf ziehen und in senkrechte Stellung bringen

FEUER

Triebwerkbrand am Boden beim Anlassen

Motor laufen lassen mit :
- Gemisch..... Schnellstop
- Gashebel..... vollgas
- Elektrische Kraftstoffpumpe..... aus
- Brandhahn..... zu

Diese Massnahme hat zum Ziel, dass der Motor den überschüssigen Kraftstoff in den Ansaugrohren ansaugt und verbrennt (allgemein nach übermässigen Einspritzen bei Startschwierigkeiten).

Wenn das Feuer nicht erlöscht

- Zündschalter..... aus
- Hauptschalter..... aus
- Generatorerregung..... aus

Das Flugzeug verlassen und das Feuer mit den verfügbaren Mitteln zu löschen versuchen : Feuerlöscher oder falls nicht vorhanden mit Decken, Kleidungsstücken oder Sand.

Triebwerkbrand im Flug

- Brandhahn..... zu
- Gemisch..... Schnellstop
- Vollgas bis zum Triebwerkstillstand
- Elektrische Kraftstoffpumpe..... aus
- Generatorerregung..... aus
- Heizung und Lüftung der Kabine..... aus
- Geschwindigkeit des besten Gleitens einnehmen..... 145 km/h - 78 kt
- Aussenlandung vorbereiten entsprechend den Verfahren, die im Abschnitt "Notlandung mit ausgefallenen Triebwerk" beschrieben sind.
- Keinen Versuch zum Wiederanlassen vornehmen.

Feuer in der Kabine

Den Brandherd mit allen verfügbaren Mitteln löschen (Feuerlöscher Zusatzausrüstung)
Zum Herausblasen des Rauches, Belüftung voll aufdrehen.
Bei Kabelbrand (typischer Verbrennungsgeruch der Isolation) :

- Kabinenlüftung veringern
- Generatorerregung ausschalten
- Hauptschalter ausschalten
- Sobald als möglich landen.

RAUHER UND UNREGELMAESSIGER TRIEBWERKLAUF

Rauher und unregelmässiger Triebwerklauf haben im allgemeinen als Ursache (Uberprüfung in der Reienfolge :

- Vergaservereisung : siehe weiter unten in Abschnitt "Vereisung"

- Zu fettes oder zu armes Gemisch : Gemisch einstellen (Siehe Abschnitt 4)

- Schmutz im Kraftstoff : Kraftstoffdruck überprüfen.
  Zusatzpumpe einschalten und auf der anderen Tank schalten.

- Zündstörung : Zündschalter auf "L" dann auf "R" und dann zurück auf "BOTH".
  Zündschalter in der Position belassen, in der der beste Triebwerklauf erziehlt wurde und mit redurzierter Leistung und vollreichem Gemisch den nächsten Flugplatz anfliegen.

STOERUNG IM SCHMIERSYSTEM

Bei Abfall des Oeldrucks die Temperatur beachten. Wenn die Temperatur über den normalen Betriebsbereich steigt (roter Bereich) :

- Leistung reduzieren
- Den nächsten Flugplatz anfliegen und sich auf eine eventuell nötig werdende Aussenlandung gefasst machen.

VEREISUNG

Wenn man von Vereisung überrascht wird, wie folgt verfahren :

- Vergaservorwärmung..... warm (ziehen)
- Die Leistung nicht vermindern um die Eisbildung zu verringern.
- Die Staurohrheizung (wenn eingebaut) einschalten.
- Kabinenheizung auf volle Leistung stellen und die gesamte Luftmenge auf die Windschutzscheibe geben (Stellung "Enteisung"), um das Eis so schnell als möglich zu entfernen.
- Umkehren oder durch Aenderung der Flughöhe Flugschichten ohne Vereisungsbedingungen aufsuchen.
- Landung auf dem nächstgelegen Flugplatz vorsehen.

Bei schneller Zunahme des Eisansatzes Notlandung durchführen. (Beachten, dass eine Eisschicht von 0,5 cm auf der Flügelvorderkante die Uberziehgeschwindigkeit merklich erhöht. Gegebenenfalls eine Anfluggeschwindigkeit einnehmen, die über der normalen Anfluggeschwindigkeit von 135 Km/h-73 kt) liegt.

BEMERKUNGEN

- Falls es sich als notwendig erweist die Vergaservorwärmung dauernd eingeschaltet zu lassen, unbedingt das Kraftstoffgemisch mit dem Gemischhebel so einstellen, dass ein runder Motorlauf erzielt wird.

- Die Vergaservorwärmung immer nach dem Motto "alles oder nichts" (voll warm oder ganz aus) verwenden, weil eine Zwischenstellung in bestimmten Fällen die Vereisung noch verstärken kann.

AUSFALL DER STROMERZEUGUNG

Ein Ausfall des Generators macht sich durch das Aufleuchten der gelben Warnlampe "Generatorausfall" im Warnfeld und einen zunehmenden Abfall der Bordspannung (Anzeige des Voltmeters) bemerkbar.

Wenn die gelbe Warnlampe aufleuchtet

- Die Generatorerregung aus und gleich wieder einschalten, dadurch wird das Uberspannungsrelais wieder eingeschaltet, das durch eine kurzzeitige Spannungsspitze abgefallen sein kann.

Wenn die Störung bleibt

- Generatorerregung ausschalten
- Alle für den Flug nicht unbedingt erforderlichen Verbraucher abschalten.
- Sobald als möglich landen um die Anlage zu überprüfen.

HINWEIS : Ein Generatorausfall hat keinen Einfluss auf die Funktion des Motors.

UNBEABSICHTIGTES TRUDELN :

Wenn die Maschine trudelt, folgendes Verfahren durchführen :

- Gashebel..... Leerlauf
- Seitenruder voll gegen die Trudelrichtung treten.
- Höhenruder..... neutral
- Querruder..... neutral

HINWEIS :

Bei Trudeln mit ausgefahrenen Landeklappen Klappen so früh wie möglich einfahren. Sobald die Drehung beendet ist : Seitenruder neutral und weich abfangen.

AUSFALL DES HOEHENRUDERS

Bei Ausfall der Höhenruderwirkung (Ausfall des Antriebs :

- Mit Hilfe der Höhenrudertrimmung und Triebwerkleistung das Flugzeug bei eingefahrenen Landeklappen auf 130 Km/h - 70 Kt stabilisieren.

- Die Trimmung nicht mehr verstellen und den Gleitwinkel nur mit dem Gas steuern. Das Gas erst in Bodennähe reduzieren.

ABSICHTLICH LEERGELASSENES BLATT

ABSCHNITT 4 - NORMALE BETRIEBSVERFAHREN

INHALTSVERZEICHNIS

Beladung..... 4.03

Normaler Betriebsbereich..... 4.03

Vorflugkontrolle..... 4.04

Innencheck vor dem Anlassen..... 4.06

Anlassen..... 4.06

Kontrollen nach dem Anlassen..... 4.07

Rollen..... 4.08

Abbremsen..... 4.08

Vor dem Start..... 4.09

Start..... 4.09

Steigflug..... 4.10

Reiseflug..... 4.10

Sinkflug..... 4.12

Landung..... 4.12

Abstellen..... 4.13

Gebrauch der Parkbremse..... 4.14

ABSICHTLICH LEERGELASSENES BLATT

BELADUNG

Vor jedem Flug ist sicherzustellen, dass das Gesamtgewicht und die Schwerpunktslage, innerhalb der vorgeschriebenen Grenzwerte liegen. Hierzu Diagramm in Abschnitt 6 benützen.

GESCHWINDIGKEITEN IN NORMALBETRIEB (IAS)

Die unten aufgeführten Geschwindigkeiten sind angezeigte Geschwindigkeiten, die für den Normalbetrieb empfohlen sind.
Sie beziehen sich auf das Flugzeug in Standardausführung bei maximalem Abflugmasse, den Bedingungen der Standardatmosphäre und auf Meeres höhe. Unterschiede von Flugzeug zu Flugzeug können durch eingebaute Ausrüstung, Zustand von Zelle und Motor atmosphärische Bedingungen sowie durch die Art der Führung des Flugzeugs auftreten.

- Geschwindigkeit des besten Steigens Vy
  (ergibt die maximale Steiggeschwindigkeit) :
  Klappen in Startstellung..... 145 km/h-78 kt
  Klappen eingefahren..... 150 km/h-81 kt

- Geschwindigkeit für den besten Steigwinkel : Vx
  Klappen in Startstellung..... 130 km/h-70 kt
  Klappen eingefahren..... 130 km/h-70 kt

- Maximale Reisegeschwindigkeit bei
  Turbulenz..... 260 km/h-140 kt

- Maximale Fluggeschwindigkeit mit
  ausgefahrenen Klappen..... 170 km/h-92 kt

- Landegeschwindigkeit (Endteil, Klappen
  auf 2. Raste ausgefahren).... 115 km/h-62 kt

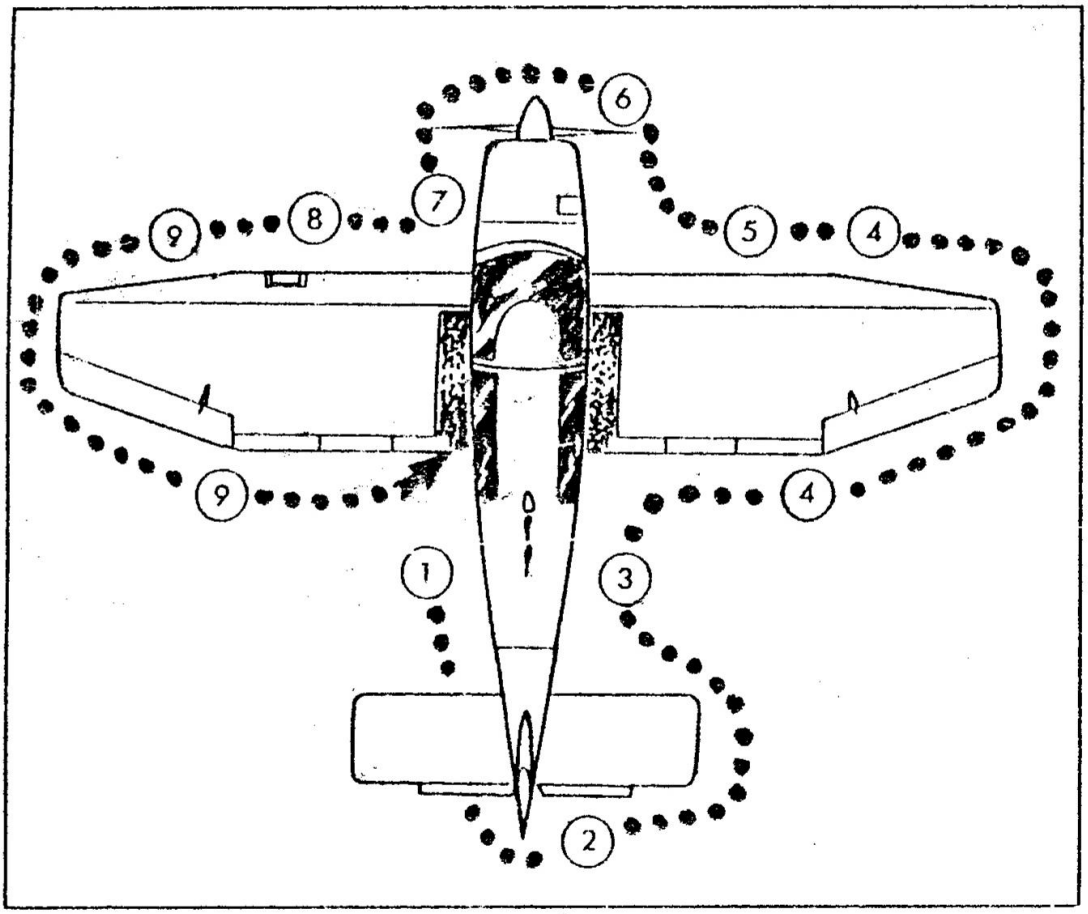

VORFLUGINSPEKTION

Muss vor jedem Flug durchgeführt werden. Bei zwischenlandungen kann die Kontrolle auf die Zutreffenden Punkte beschränkt werden.

Zündung..... "OFF"
Steuerung..... frei
Hauptschalter..... EIN
Landeklappen..... Funktion überprüft
Kraftstoffvorrat..... überprüft
Hauptschalter..... AUS
Dokumente..... an Bord
Gepäck..... Sicher verstaut

Vollen Ausschlag des Höhenruders überprüfen, dann Aussenkontrolle (nach obigem schema) durchführen, beginnend mit der linken Seitenwand des Rumpfes.

1	Tankverschluss	aufgesetzt, verriegelt
	Ablassen	betätigt
	Druckabnahme statischer Druck	sauber, nicht verstopft
2	Höhenleitwerk	Oberflächenbeschaffenheit überprüft
	Seitenruder	Ausschlag, Spiel überprüft
3	Druckabnahme statischer Druck	sauber, nicht verstopft
4	Zustand und Ausfahren der Landeklappen, der Querruder	überprüft
	Zustand Randbogen und Navigationslampe	überprüft
5	Ueberziehwarnung	sauber, Ausschlag überprüft
		Befestigung und Zustand der Radverkleidung überprüft
	Hauptfahrwerk rechts	Einfederung normal
		Reifen aufgepumpt
6	Oelstand (2 U.S q mini - 8 U.S q maxi)	überprüft, Stopfen verschraubt
		Handlochdeckel geschlossen
	Befestigung der Motorhaube	überprüft
	Luftschraube	sauber, in Ordnung
	Luftschraubenkonus	ohne Spiel
	Lufteinläufe	sauber, nicht verstopft
7		Befestigung und Zustand der Radverkleidung überprüft
	Bugfahrwerk	Einfederung normal
		Reifen aufgepumpt
		Zuggabel entfernt
	Auspuffrohre	fester Sitz
	Wasserablass unter dem Rumpf	betätigt
	Sauberkeit der Windschutzscheibe	überprüft
8		Befestigung und Zustand der Radverkleidung überprüft
	Hauptfahrwerk links	Einfederung normal
		Reifen aufgepumpt
9	Staurohr	sauber, nicht verstopft
	Landescheinwerfer	Scheibe sauber
	Zustand Randbogen und Navigationslampe	überprüft
	Zustand und Beweglichkeit Querruder und Landeklappen	überprüft

INNENKONTROLLE VOR DEM ANLASSEN

Haube..... geschlossen,verriegelt
Parkbremse..... ziehen
Vordere Sitze..... eingestellt,verriegelt
Bauch und Schultergurte.. angelegt,festgezogen
Steuerung.... frei, ohne Spiel und übermässige
Reibung (Seitenruder beim Rollen überprüfen)
Höhenrudertrimmung..... Ausschläge überprüft
dann je nach Beladung auf entsprechende
Startstellung
Hauptschalter..... ein

ANLASSEN DES MOTORS

Normales Verfahren :
Vergaservorwärmung..... kalt (drücken)
Gemisch..... voll reich (drücken)
Zusammenstosswarnlicht..... ein
Kraftstoffanzeiger..... überprüft
Brandhahn.....Funktionskontrolle,auf
Zündschalter.....auf "L"
Elektrische Kraftstoffpumpe..... ein
Gashebel..... 2 bis 3 Einspritzungen
dann 2 cm auf
Propellerkreis..... frei
Anlasser.....ein (maximal 30 Sek.)
Zündschalter.....(L+R) "Both"

Verfahren bei warmen Motor :
Das gleiche Verfahren wie bei "Normales Verfahren" aber ohne Einspritzung.

Verfahren bei kalter Witterung :
Das gleiche Verfahren wie bei "Normales Verfahren" aber den Motor durch weiteres Einpritzen bis zu einer Drehzahl von 900 bis 1000 U/Mn unterstützen.

"Ersoffener" Motor

Elektrische Kraftstoffpumpe..... aus
Gemisch..... voll arm
Gashebel..... voll gas
Anlasser..... einige Sekunden lang betätigen

Sobald der Motor anspringt, Gemisch auf "reich" stellen (und das normale Anlassverfahren fortsetzen ohne Einspritzung).

ACHTUNG

Den Anlasser nicht länger als 30 Sekunden einschalten. Mindestens eine Minute bis zu einem neuen Anlass vorgang warten.

Sobald der Motor läuft, Oeldruck überprüfen. Wenn nach 15 bis 20 Sekunden kein Oeldruck vorhanden ist, Motor abstellen und Ursache feststellen.

NACH DEM ANLASSEN

Drehzahl..... 1200 U/Mn
Elektrische Kraftstoffpumpe..... aus
Generatorerregung..... ein
Voltmeter..... grüner Bereich
Unterdruckanzeige (falls eingebaut).. überprüft
Warn und Anzeigelampen..... geprüft

Funk..... ein
Höhenmesser..... eingestellt
Landeklappen..... eingefahren

ROLLEN

Parkbremse..... gelöst
Bremsen..... überprüft
Wendezeiger..... überprüft
Kurskreisel..... überprüft
Drehzahlen von über 1200 U/Mn vermeiden solange die Oeltemperatur im gelben Bereich ist.

ABBREMSEN

Parkbremse..... ziehen
Oldruck und Temperatur..... grüner Bereich
Kraftstoffdruck..... grüner Bereich
Gemisch..... voll reich
Vergaservorwärmung..... kalt (drücken)

Magnetprobe

Gashebel..... 2000 U/Mn
Magnetwahl :
Maximaler Abfall zwischen (L) oder (R) und (L+R).....175 U/Mn
Maximaler Abfall zwischen (L) und (R).. 50 U/Mn

Ueberprüfung der Vergaservorwärmung

Vergaservorwärmung..... .warm (ziehen)
(Drehzahlabfall von ungefähr 100 U/Mn)
Dann wieder..... kalt (drücken)

Ueberprüfung der Gemischregulierung

Gemisch..... abmagern bis zu einem Drehzahl abfall, dann wieder "voll reich"

Leerlaufprobe

Gashebel..... 600 bis 650 U/Mn

VOR DEM START

Steuerung..... frei
Zündschalter..... L+R ("Both")
Kabine (Sitze,Gurte,Haube)..... überprüft
Brandhahn..... offen
Elektrische Kraftstoffpumpe..... ein
Höhenrudertrimmung.....Startstellung
..... je nach Beladung
Triebwerkinstrumente..... überprüft
Fluginstrumente..... eingestellt
Landeklappen..... voll ausfahren
Dann wieder..... auf "1. Raste"
Gas..... Drehzahl 1200 U/Mn

START

Normaler Start

Mindestdrehzahl bei Vollgas..... 2300 U/Mn
Abhebegeschwindigkeit..... 100 km/h-54 kt
Geschwindigkeit Anfangsteigflug. 130 km/h-70 kt
Nach Ueberfliegen der Hindernisse, Längsneigung verringern um eine Steiggeschwindigkeit von
.....145 km/h-78 kt zu erhalten
Elektrische Kraftstoffpumpe..... aus
Kraftstoffdruck..... überprüft (grüner Bereich)
Klappen..... eingefahren

Kurzstart

Klappen..... 1. Raste
Vollgas geben (mind. 2300 U/Mn), Bremsen festhalten, dann loslassen.
Abhebegeschwindigkeit..... 100 km/h-53 kt

Dann, wenn nötig (Ueberfliegen eines Hindernisses) Geschwindigkeit des besten Steigens (130 km/h-70 kt) einnehmen.

Start bei Seitenwind

Klappen..... Startstellung
Querruder..... gegen den Wind
Mit einer etwas höheren Geschwindigkeit als für den Normalstart empfohlen abheben.
Die Abtrift durch das übliche Verfahren, Hängelassen des Flügels in den Wind, verhindern (max Schräglage in Bodennähe : 15°)
Nachgewiesener Seitenwind.....40 Km/h-22 Kt

STEIGFLUG

Normaler Steigflug (nach dem Einfahren der Klappen)
Steigfluggeschwindigkeit.IAS von 150 Km/h-81 Kt bis 7000 ft Flughöhe (von 7000 ft Flughöhe ab : ..... 145 Km/h-78 Kt
Vollgas beibehalten, Temperaturen überwachen.
Oberhalb von 5000 ft, Gemisch regulieren.

Steigflug mit maximalem Steigwinkel
Der beste Steigwinkel wird erziehlt bei einer IAS von 130 km/h-70 kt, Klappen auf 1. Raste und mit den Klappen eingefahren.

BEMERKUNG

1) Dieser Steigflug sollte nur in Ausnahme Fällen benützt werden (Schlechtere Kühlung des Triebwerkes)
2) Im Steigflug sind die letzten 10 Liter Kraftstoff im Haupttank nicht nutzbar.

REISEFLUG

Die Reiseflugdaten sind im Abschnitt 5 enthalten.

Gebrauch des Gemischreglers

Bei Start und Steigflug, immer "Voll reiches" Gemisch.

Unter bestimmten Bedingungen (Start von hochgelegenen Plätzen, und ausgedehnten Steigflügen oberhalb von 5000 ft) kann diese Einstellung sich als zu reich herausstellen und zu unregelmässigem Motorlauf und Leistungsverlust führen. In diesem Fall wird das Gemisch nicht unter dem Gesichtspunkt der Wirtschaftlichkeit verarmt, sondern so eingestellt, dass ein runder Motorlauf erzielt, wird.

Gemischeinstellung im Reiseflug :

Den Gemischhebel immer weiter zurückziehen bis die Drehzahl zu fallen beginnt. Dann wieder etwas nach vorn schieben bis die Drehzahl wieder steigt und der Motor regelmässig arbeit.

HINWEIS

Darauf achten, dass das Gemisch nicht zu sehr verarmt wird, da sonst der Motor überhitzt wird.

VOR JEDER LEISTUNGSERHOEHUNG DAS GEMISCH "REICH" STELLEN.

SINKFLUG

Schneller Abstieg

Leistung so einstellen, dass der gewünschte Gleitweg erzielt wird. Vergaservorwärmung auf "Warm" (ziehen). Alle 1500 ft Gas geben um eine zu starke Abkühlung des Motors zu verhindern und um die Kerzen freizubrennen.

Anflug oder Gegenanflug

Gemisch..... voll reich
Elektrische Kraftstoffpumpe..... ein
Vergaservorwärmung nach Bedarf... warm (ziehen)
.....oder kalt (drücken)
Kabine (Sitze,Gurte)..... überprüft
Landeklappen (unterhalb von 170 km/h-92 kt)....
..... 1. Raste
Geschwindigkeit..... 150 km/h-81 kt
Höhenrudertrimmung..... eingestellt
Wingleveler oder Autopilot (wenn eingebaut).aus

Endteil

Vergaservorwärmung..... kalt (drücken)
Landeklappen (unterhalb von 150 km/h-81 kt)....
..... 2. Raste
Anfluggeschwindigkeit..... 115 km/h-62 kt
Höhenrudertrimmung..... eingestellt

LANDUNG

Kurzlandung

Landeklappen..... "Landestellung"
Anflug mit Schleppgas Geschwindigkeit.....
..... 115 km/h-62 kt
Nach dem Aufsetzen kräftig bremsen und dabei das Höhenruder gezogen halten und die Landeklappe einfahren.

Landung bei Seitenwind oder bei starken Böen

Klappen..... ..... 1. Raste
Anfluggeschwindigkeit 130 km/h-70 kt + ½ der Böengeschwindigkeit.
Die Abtrift auf bekannte Weise verhindern.
Nachgewiesene Seitenwindkomponente.....
.....40 km/h-22 kt

Durchstarten

Vergaservorwärmung: kalt eingeschoben überprüft
Gashebel..... vollgas
Geschwindigkeit..... 120 km/h-65 kt
Landeklappen langsam bis auf 1. Raste einfahren und bei 140 km/h-75 kt Steigfluglage einnehmen.

NACH DER LANDUNG

Elektrische Kraftstoffpumpe..... aus
Landeklappen..... eingefahren
Navigationsausrüstung..... aus

ABSTELLEN DES TRIEBWERKES

Parkbremse..... ziehen
Landeklappen..... ausgefahren
Funk und elektrische Ausrüstung..... aus
Test der Zündung..... im Leerlauf, aus
dann L+R "Both"
Drehzahl..... 1000 U/Mn
Gemisch..... ganz ziehen

Nach des Abstellen des Triebwerkes

Zündung..... aus
Zusammenstosswarnlicht..... aus
Generatorerregung..... aus
Hauptschalter..... aus
Nach dem Vorlegen der Bremsklötze, Parkbremse lösen.

ABSICHTLICH LEERGELASSENES BLATT

ABSCHNITT 5 - LEISTUNGEN

INHALTSVERZEICHNIS

Lärmbeschränkungen..... 5.02

Uberziehgeschwindigkeit..... 5.03

Startleistungen..... 5.04

Steigleistungen..... 5.05

Reiseflugleistungen..... 5.07

Landeleistungen..... 5.08

* LAERMBESCHRAENKUNGEN

Die gesetzliche Lärmgrenze beim zulässigen Höchstabfluggewicht von 1000 Kg für das Flugzeug DR 400/140 B beträgt : 73,3 dB (A).

Der unter den gesetzlichen Messbedingungen ermittelte Lärmpegel beträgt bei der höchstzulässigen Dauerdrehzahl 64,7 dB (A).

Dieses Flugzeug erfüllt also die gesetzlichen Lärmbestimmungen gemäss dem amtlichen Lärmzeugnis.

* Gilt für Flugmaschinen, deren erster Flug nach dem 1. Januar 1980 erfolgteabsolvierten.

UEBERZIEHGESCHWINDIGKEITEN IAS

GEWICHT : 1000 Kg, Triebwerk im Leerlauf

	Km/h - Kt		
Neigung des Flugzeuges	0°	30°	60°
Klappen eingefahren	99-54	106-58	140-76
Klappen 1. Raste (Startstellung)	93-51	99-54	131-71
Klappen 2. Raste (Landestellung)	87-47	93-51	123-67

Anemometrische Eichmassnahme :

Angegebene Geschwindigkeitswerte sind praktisch den kalibrierten Geschwindigkeitswerten gleich.

Vi = V CAS

STARTLEISTUNGEN

Bei Windstille, Klappen auf 1. Raste (Startstellung)
SENSENICH PROPELLER 74 DM6 S5-2-60

DRUCK Höhe (feet)	TEMPERATUR (°C)	GEWICHT 1000 Kg		GEWICHT 800 Kg	
		Betonbahn	Grasbahn	Betonbahn	Grasbahn
0	-5	435 (215)	495 (270)	245 (125)	270 (135)
	Std = 15	485 (245)	550 (310)	265 (135)	290 (160)
	+35	535 (270)	610 (340)	290 (150)	320 (180)
4000	-13	580 (290)	665 (385)	320 (165)	355 (190)
	Std = 7	645 (330)	750 (440)	350 (180)	390 (220)
	+27	720 (365)	840 (485)	385 (200)	430 (245)
8000	-21	780 (390)	930 (555)	415 (225)	450 (275)
	Std = -1	870 (445)	1055 (630)	465 (245)	530 (310)
	+19	975 (500)	1195 (710)	515 (275)	590 (355)

In jedem Fach : - Gesamtbahnstrecke in m vom Stand aus, um die 15 m-Strecke bei V = 1,3 VSI durchfahren zu können.

- (Rollbahnstrecke zur Erzielung von 1,1 VSI)

Einfluss von Gegenwind : Bei 10 kt multipliziere mit 0,79
Bei 20 kt multipliziere mit 0,64
Bei 30 kt multipliziere mit 0,53

STEIGFLUGLEISTUNGEN

SENSENICH 74 DM6-S5-2-60

1) Klappen auf "Startstellung"

Bei Normalatmosphäre
Max. Gewicht : 1000 Kg
Steiggeschwindigkeit (Vz) am Boden : 4,3 m/s
Verringerung um jeweils 0,3 m/s alle 1000 ft
Beste Steiggeschwindigkeit .. 145 km/h-78 kt
Bester Steigwinkel Geschwindigkeit :.....
.. 130 km/h-70 kt

2) Eingefahrenen Klappen :

Bei Normalatmosphäre
Vollgas, Gemisch : beste Leistung
Max. Gewicht : 1000 kg
Steiggeschwindigkeit (Vz) am Boden : 4,4 m/s
Verringerung um jeweils 0,25 m/s alle 1000ft
Dienstgipfelhöhe : 14000 ft
Beste Steiggeschwindigkeit.....
... 150 km/h-81 kt..... am Boden
... 135 km/h-73 kt auf Gipfelhöhe
Bester Steigwinkel Geschwindigkeit.....
..... 130 km/h-70 kt
Max. Gewicht : 800 kg

Steiggeschwindigkeit (Vz) am Boden : 5,9 m/s
Verringerung um jeweils 0,28 m/s alle 1000ft

Einfluss der Temperatur
Alle 10°C über Normalatmosphäre, die Gipfelhöhe um 1000 ft senken, Steiggeschwindigkeit um 0,25 m/s verrigern.

GLEITFLUGLEISTUNGEN

Bei abgeschaltetem Triebwerk, legt das Flugzeug (bei Windstille) bei VI = 145 km/h-78 kt eine Strecke von 9,3 mal seine Flughöhe zurück. Flughöhe und Temperatur bleiben ohne nennenswerten Einfluss.

REISEFLUGLEISTUNGEN

In Standard-Luftverhältnissen, Max.Gewicht : 1000 kg,
bei optimal eingestelltem Gemisch, 100 L ausfliegbar,
ohne Kraftstoffreserve, bei Windstille
Luftschraubentype SENSENICH 74 DM6-S5-2-60

DRUCK Höhe feet	DREHZAHL tr/mn	VERBRAUCH l/h	EIGENGE-SCHWINDIGKEIT km/h	EIGENGE-SCHWINDIGKEIT kt	FLUGDAUER h/mn	STRECKE km	STRECKE Nm
2000	2150	25(*)	175	94	4.00	700	375
	2400	25	206	111	4.00	825	445
	2500	28	216	116	3.35	770	415
5500	2400	25	206	111	4.00	825	445
	2500	28	216	116	3.35	770	415
8500	2400	25	206	111	4.00	825	445
	2500	28	216	116	3.35	770	415

(*) Voll reich

LANDELEISTUNGEN

Bei Windstille, Klappen in 2. Raste (Landestellung)

Höhe (feet)	TEMPERATUR (°C)	GEWICHT 1000 kg		GEWICHT 800 kg	
		Leichtes Bremsen, Beton- oder Grasbahn	Ohne Bremsen auf Grasbahn	Leichtes Bremsen, Beton- oder Grasbahn	Ohne Bremsen auf Grasbahn
0	-5	445 (205)	550 (310)	380 (165)	460 (245)
	Std = 15	470 (220)	580 (330)	400 (175)	490 (265)
	+35	500 (235)	615 (350)	420 (190)	515 (285)
4000	-13	490 (230)	605 (345)	410 (185)	500 (275)
	Std = 7	520 (250)	640 (370)	435 (200)	535 (300)
	+27	550 (270)	680 (400)	460 (215)	565 (320)
8000	-21	540 (260)	670 (390)	450 (205)	555 (310)
	Std = -1	575 (280)	715 (420)	480 (225)	590 (335)
	+19	610 (300)	760 (450)	505 (240)	625 (360)

In jedem Fach : - Gesamtbahnstrecke in m vom Durchfahren der 15 m-Strecke mit V = 1,3 VSO bis zum Stillstand

- (Ausrollstrecke nach Aufsetzpunkt mit VSO)

Einfluss von Gegenwind : Bei 10 kt multipliziere mit 0,79
Bei 20 kt multipliziere mit 0,64
Bei 30 kt multipliziere mit 0,53

ABSICHTLICH LEERGELASSENES BLATT

ABSCHNITT 6 - SCHWERPUNKTLAGE

INHALTSVERZEICHNIS

Bestimmung von Gewicht
und Schwerpunkt..... 6.02

Benützung des Ladediagrammes..... 6.03

Wägebericht..... 6.04

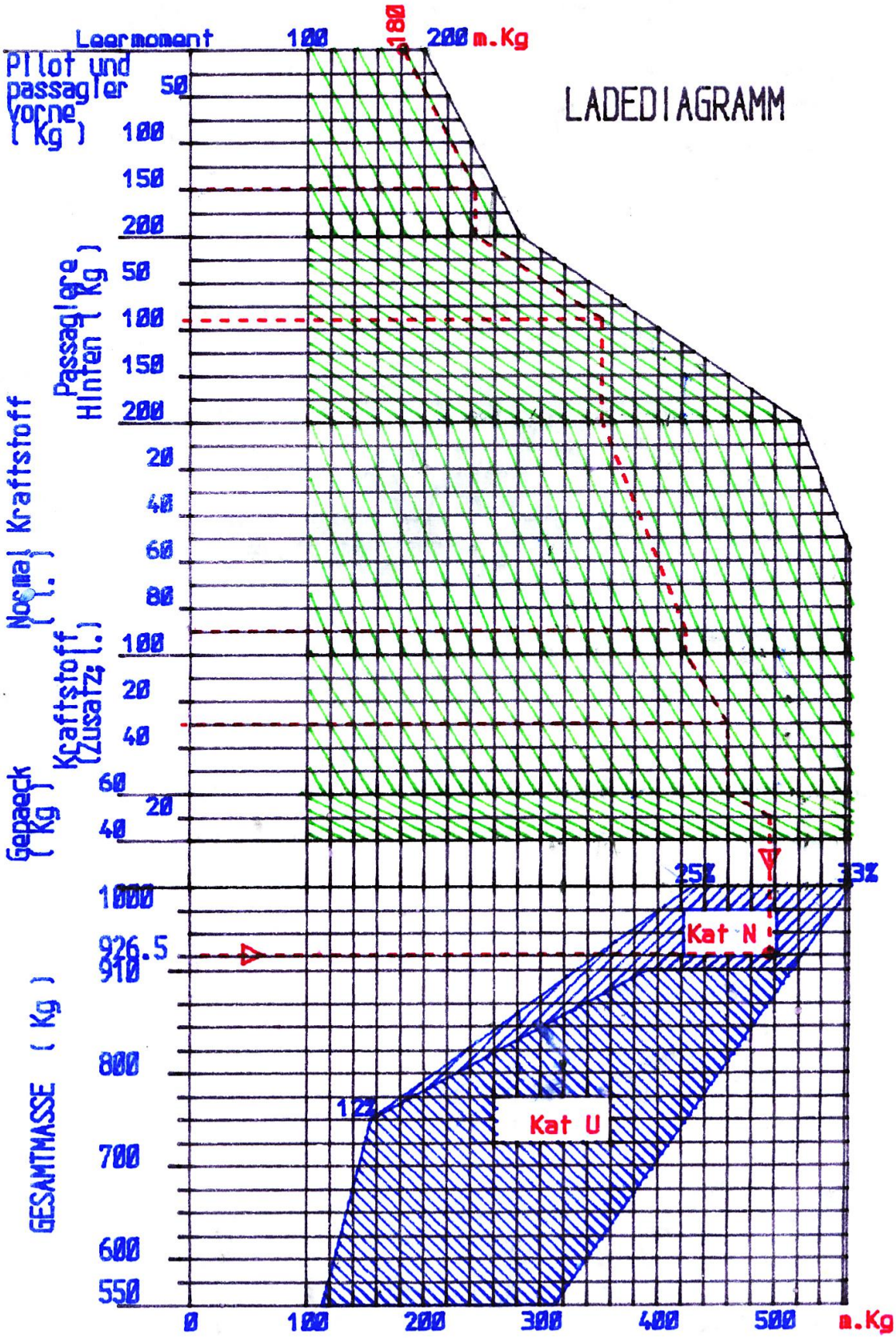
LADEDIAGRAMM
Leermoment
100
180
200 m.Kg
Pilot und passagier vorne (Kg)
50
100
150
200
Passagiere Hinten (Kg)
50
100
150
200
Normal Kraftstoff (L)
20
40
60
80
100
Kraftstoff Zusatz (L)
20
40
Gepaeck (Kg)
60
20
40
GESAMTMASSE (Kg)
1000
926.5
910
800
700
600
550
25%
33%
Kat N
Kat U
0
100
200
300
400
500
m.Kg

BENUETZUNG DES LADEDIAGRAMMES

1. Gesamtmasse des Flugzeuges berechnen : Leermasse (Wägebericht) + Insassen + Kraftstoff (Kg) + Gepäck. Sicherstellen, dass 1000 kg mit einer Benützung in Kategorie "N" und 910 kg in Kategorie "U" nicht überschreiten werden.

2. Das Leergewichtsmoment des Flugzeuges (Wägebericht) auf der waagrechten Achse des Diagramms abtragen, dann wie mit den Werten des Beispiels (punktierte Linie) grafisch das Gesamtmoment bestimmen.
   Falls das ermittelte Gesamtmoment und die errechnete Gesamtmasse einen Punkt innerhalb der schraffierten Fläche ergeben (Feld Masse-Moment), ist die Beladung zulässig.

ANMERKUNG : Wenn kein Zusatztank vorhanden ist, so ist einfach die Senkrechte durch den Bereich für der Kraftstoff in Zusatztank hindurch zu verlängern.

BEISPIEL : *

Leergewichtsmoment.....	180	m.kg
Leergewicht.....	580	kg
Pilot + Passagier vorn.....	150	kg
Passagiere hinten.....	90	kg
Kraftstoff (90 l).....	64,8	kg
Zusatzkraftstoff (30 l).....	21,6	kg
Gepäck.....	20	kg
GESAMTGEWICHT.....	926,4	kg

SCHWERPUNKT : Korrekt (innerhalb der schraffierten Fläche)

1 Liter AVGAS = 0,72 kg

* HINWEIS :
Die hier oben ins Beispiel angegebenen Leermasse und das Leermoment sind nur als Orientierung gedacht. Bitte benützen Sie die entsprechenden Werte des letzten Wägenberichtes eures Flugzeuges (siehe Flugzeugkontrollmappe)

EINTRAGUNG	WERK NR

WAEGEBERICHT

Datum	Leergewicht	Hebelarm	Moment	

ABSICHTLICH LEERGELASSENES BLATT

ABSCHNITT 7 - ZUBEHOERBAUTEILE

INHALTSVERZEICHNIS

7.1 - Elektrische Seitenrudertrimmung Gierdämpfer..... 7.02

7.2 - Zusatztank..... 7.04

7.1 - VERWENDUNG DER ROLLSTABILISIERUNG (Opt.)

1 - TYPE

Rollstabilisierung EDO-AIRE-MITCHELL
CENTURY 1-AK 306

2 - GEBRAUCHGRENZEN

Die Rollstabilisierung darf beim Abflug und beim Landen nicht eingesetzt werden.

3 - NOTVERFAHREN

Bei mangelhafter Funktion kann die Rollstabilisierung vorürbergehend entweder durch Betätigung der am Knüppel angeordneten Drucktaste oder durch Abschaltung des am Instrumentenbrett gelegenen Hauptschalters wirkungslos geschaltet werden.

4 - NORMALVERFAHREN

4.1 - Vorflugkontrolle

- Hauptschalter der Rollstabilisierung auf EIN
- "TURN" beschrifteten Steuerknopf von links nach rechts verdrehen und dabei prüfen, ob der Knüppel ordnungsgemäss in der richtigen Richtung gedreht wird.
- Während des Rollens und bei neutral verdrehtem "TURN"-Knopf ist nachzuprüfen, ob der Knüppel auch ordnungsgemäss beim Kurvenfahren in die entgegengesetzte Seite dreht.
- Querruderbewegung überprüfen.
- Rollstabilisierung darauf kontrollieren, ob bei Betätigung der auf dem Knüppel angeordneten Drucktaste die Stabilisierung vorübergehend ausgekoppelt wird.

4.2 - Vor dem Abflug bzw. der Landung

Hauptschalter der Rollstabilisierung abschalten

4.3 - Steigflug, Reiseflug, Sinkflug

Nachdem die Flughöhe der Maschine stabilisiert und der Höhenrudertrim bedarfsweise eingestellt wurde, Hauptschalter der Rollstabilisierung einschalten.

Bei neutral verstelltem "TURN"-Steuerknopf ist nun zur Vermeidung von etwaigen Kursabweichungen der mit "TRIM" beschriftete Schalter einzustellen.

Eine Kurve kann entweder manuell durch Betätigung der am Knüppel angeordneten Drucktaste und durch Bedienung der entsprechenden Steuerungen oder dann durch Verdrehen des "TURN"-Steuerknopfes (Kurve mit Standardbeschleunigungswerten) eingeleitet werden.

ANMERCKUNG

Zur Erzielung eines einwandfrei horizontalen Flugverhaltens ohne Kursabweichungen ist zunächst eine genaue Einstellung des Stabilisierungstrims erforderlich und dann darauf zu achten, dass der Wendezeiger eine immer schön mittige Stellung annimmt.

7.2 - EINBAU EINES ZUSATZBEHAELTERS

- Inhalt : 50 Liter
- Hebelarm : 1,61 m
- Einbaustelle : unter dem Gepäckraum

Um den im Zusatzbehälter enthaltenen Kraftstoff verbrauchen zu können, ist vorerst ausreichend viel Kraftstoff aus dem Heckbehälter zu verbrauchen und dann der Kraftstoff vom Zusatzbehälter in den Letzteren durch Betätigung des am Vordertunnel angeordneten Zughebels umzufüllen

Die im Zusatzbehälter jeweils enthaltene Kraftstoffmenge wird durch ein im Instrumentenbrett rechts oben eingebautes Anzeigegerät angegeben.

INVENTAIRE DES EQUIPEMENTS STANDARDS

STANDARS EQUIPMENT LISTE

X : En place lors de la pesée — O : non utilisé sur l'appareil
X : Included in weight and balance data — O : not fitted on aircraft

Obligatoire pour CDN : C
Optionnel remplace le précédant : ∅

EQUIPEMENTS

Compulsary : C
Optional : ∅

	Q.te	DESIGNATION	FABRICANT *MANUFACTURER*	REFERENCE	N° SERIE *SERIAL N°*	X O	Obs.
C	1	Moteur équipé *Engine equiped*	LYCOMING	O-320-D2A	L 15484-39A	X	
C	1	Démarreur *Starter*	~~PRESTOLITE~~ Sky Tec	~~MZ 4222~~ M9 MC	11Y 309	X	
C	1	Alternateur *Alternator*	PRESTOLITE	ALY 8420	9Y 183	X	
C	1	Carburateur *Carburettor*	MARVEL	10-5217	DC 4 3331	X	
C	1	Magnéto G. *Left magneto*	SLICK	4272	89040035	X	
C	1	Magnéto D. *Right magneto*	SLICK	4270	89030337	X	
C	1	Radiateur d'huile *Oil cooler*	N.D.M	2002 A	B89-5802-5	X	
C	1	Bâti moteur *Engine mount*	A.P.R.	51 26 10	700	X	
C	1	Hélice *Propeller*	SENSENICH	74DM6S5-2-60 74DM6S5-2-64	A 53128	X	
C	1	Compas magnetique *Magnetic compass*	AIRPATH	C 2400	SN°	X	
C	1	Altimètre *Altimeter*	UI	5934	1F 087	X	
C	1	Indicateur de virage *Turn and slip indicator*	MID INSTRUMENT	1394-T100	8903-160	X	
C	1	Anémomètre *Airspeed indicator*	SIGMA	5171	T 30163	X	
C	1	Variomètre *Vertical speed indicator*	UI	7000	3D 544	X	
C	1	Tachymètre *RPM gauge*	MITCHELL	98480-25	1227	X	
C	1	Batterie 12 V 32 ah *12 V battery*	SONNENSHEIM	6MK5	SN°	X	
C	1	Régulateur de tension *Voltage regulator*	JPC	614170	1163	X	
C	1	Sélecteur de magnetos *Magneto switch*	BENDIX	10-35/290-1	SN°	X	

DATE : 19 JUIL. 1989

CONTROLE A.P.R. :

INVENTAIRE DES EQUIPEMENTS STANDARDS

STANDARD EQUIPMENT LIST

X : En place lors de la pesée O : non utilisé sur l'appareil
X : Included in weight and balance data O : not fitted on aircraft

	Q.te	DESIGNATION	FABRICANT *MANUFACTURER*	REFERENCE	N° SERIE *SERIAL N°*	X O	Obs.
C	1	**Bouton démarreur** **Push-button starter**	ARNOUX	1006 T	SN°	X	
C	1	Interrupteur général *Master switch*	E.T.A	110P10F10 RS 04X	SN°	X	
C	1	Transmetteur de pression huile *Oil pressure transmitter*	JAEGER	3135 5001 L3	SN°	X	
C	1	Transmetteur de pression essence *Fuel pressure transmitter*	JAEGER	68-651-12	SN°	X	
C	1	Jaugeur essence *Fuel tank gauge*	JAEGER	083-093-01	SN°	X	
C	1	Récepteur jaugeur *Fuel tank indicator*	JAEGER	089-027-02	SN°	X	
C	1	**Voltmètre** **Voltmeter**	JAEGER	312272-01	SN°	X	
C	1	Sonde de température d'huile *Oil temperature gauge*	JAEGER	74-127	SN°	X	
C	1	Récepteur température huile *Oil temperature indicator*	JAEGER	089-470-02	SN°	X	
C	8	Voyants lumineux *Warning lights*	LKL	EL 09A	SN°	X	
C	12	Fusibles *Fuses*	CEHESS		SN°	X	
C	1	Fusible 40 A *40 A fuse*	E.T.A	413K14LN2	SN°	X	
C	4	Interrupteur disjoncteur *Circuit breaker*	DIRUPTOR	1225/75/67	SN°	X	
C	6	Interrupteur *Circuit breaker*	E.T.A	110P10F10 RS	SN°	X	
C	1	Avertisseur de décrochage *Stall warning signal*	SONALERT	SC 628P	SN°	X	
C	1	Sonde de décrochage *Stall warning device*	A.P.R	798800	180	X	
C	1	Reservoir de 110 L *Rear tank 110 L*	A.P.R	52.26 60	421	X	
C	1	Robinet d'essence *Fuel cock*	LE BOZEC	A-6196	1251	X	

DATE : 19 JUIL. 1989

CONTROLE A.P.R. :

INVENTAIRE DES EQUIPMENTS STANDARDS

STANDARD EQUIPMENT LIST

X : En place lors de la pesée O : non utilisé sur l'appareil
X : Included in weight and balance data O : not fitted on aircraft

Q.te		DESIGNATION	FABRICANT *MANUFACTURER*	REFERENCE	N° SERIE *SERIAL N°*	X O	Obs.
C	2	Robinet de purge *Draining cock*	LE BOZEC	56-077	SN°	X	
C	1	Filtre a essence *Fuel filter*	LE BOZEC	A 6196	1933	X	
C	1	Pompe électrique *Electric fuel pump*	FACET	474 A	SN°	X	
C	4	Ceinture à enrouleur *Security belt*	ANJOU AERO	H 3	SN°	X	
C	1	Carénage train G. *Left main wheel fairing*	A.P.R.		SN°	X	
C	1	Carénage train D. *Right main wheel fairing*	A.P.R.	48-150	SN°	X	
C	1	Carénage train AV. *Front wheel fairing*	A.P.R.		SN°	X	
C	3	Pneumatique "Aviation" *Tyres*	DUNLOP	380x150	SN°	X	
C	1	Plexiglass de verrière *Canopy plexiglass*	MECAPLEX		SN°	X	
C	1	Train d'atterrissage G. *Left main gear*	A.P.R.	41.26.01	1124	X	
C	1	Train d'atterrissage D. *Right main gear*	A.P.R.	41.26.02	1124	X	
C	1	Train d'atterrissage AV. *Front gear*	A.P.R.	41.26.001	1092	X	
C	1	Capotage moteur *Engine cowlings*	A.P.R.	58-52-53	SN°	X	
C	2	Ceinture de Securite Security belt.	ANJOU AERO	343-1	SN°	X	

DATE : 19 JUIL. 1989

CONTROLE A.P.R. :

INVENTAIRE DES EQUIPEMENTS SUPPLEMENTAIRES

X : en place lors de la pesée

SUPPLEMENTARY EQUIPMENT LIST

X : included in weight and balance data

Qte	DESIGNATION	FABRICANT *MANUFACTURER*	REFERENCE	N° DE SERIE *SERIAL N°*	X	Obs
1	Pompe a vide	AIRBORNE	211 CC	10AD 6961	X	
~~1~~	~~Mano suction~~	~~U.M.A~~	~~3310-6~~	~~A 2857~~	~~X~~	
~~1~~	~~Horizon~~	~~ALLEN~~	~~RCA 22-7~~	~~890709~~	~~X~~	
~~1~~	~~Directionnel~~	~~ALLEN~~	~~RCA 11A-8~~	~~890908~~	~~X~~	
1	Reservoir supplementaire	A.P.R	522665	111	X	
1	Robinet essence	LE BOZEC	53145 Bis	2711	X	
1	Jaugeur	JAEGER	083-093-01	SN°	X	
1	Recepteur jaugeur	JAEGER	089.027.02	SN°	X	
1	Feu anti collision	J.P.C	64411-02	6112	X	
2	Phares	Gal ELECTRIC	4509	SN°	X	
3	Feux de navigation	GRIMES	1285	SN°	X	
~~1~~	~~COM-NAV~~	~~KING~~	~~KX155-38~~	~~64024~~	~~X~~	
~~1~~	~~Indicateur VOR~~	~~KING~~	~~KI 203~~	~~18550~~	X	
~~1~~	~~Transpondeur~~	~~KING~~	~~KT 76 A~~	~~70947~~	~~X~~	
~~1~~	~~Alti codeur~~	~~KING~~	~~KEA 127~~	~~67765~~	~~X~~	
1	Haut parleur	PIGEON	4-5 Ω	SN°	X	
1	Micromain	TELEX	62800-001	SN°	X	
2	Boutons alternat	ARNOULT	1006T	SN°	X	
~~1~~	~~Balise de detresse~~	~~JOLLIET~~	~~JE 2~~	~~9277~~	~~X~~	
~~1~~	~~Stundenzähler~~	~~Lütolf~~	~~—~~	~~—~~	~~X~~	Wei BAZI
1	Intercom	Isocom	—	—	X	15.11.92
1	Main Spar reinforcement Kit + repaint wing	Robin	Doc. 1001215	1916	X	17.11.04
~~1~~	~~XPDR mode S Garmin GTX328~~	~~Garmin~~	~~GTX 328~~	~~13K012012~~	~~X~~	09/2008
1	Altitude encoder ACK A-30 mod.8 serial	ACK	A-30	112876	X	CAT WR n° 208.193
1	ELT ARTEX ME 406 ACE	Artex	ME 406 ACE	188-07891	X	AIRLA 4.8.2009
1	Flugzeitenzähler	Winter	1510	1605	X	Airla 14.12.10
1	PS Engineering Intercom PM500	PS Engineering			X	
1	NAV/COM/GNSS Navigator GTN 750	Garmin			X	
1	GPS Antenna GA 35	Garmin			X	
1	Electronic Flight Display EFD1000 VFR	Aspen			X	
1	Remote Sensor Module RSM	Aspen			X	
1	Flarm Traffic Receiver TRX1500A	Garrecht			X	
1	MODE S Transponder GTX335	Garmin			X	
1	FLARM Antenna AV-75	RAMI			X	
1	ADS-B Antenna, CI 105-16	Comant			X	

Removed 09/2008 see CAT WR n° 208.1933

Removed 4.8.2009

03/2017

AVIONITECAG CH.145.0181

DATE : 19 JUIL. 1989

CONTROLE A.P.R. :

DR 400/ 140B

RAPPORT DE PESEE ET CENTRAGE

Avion N° 1916.
HB-KCJ

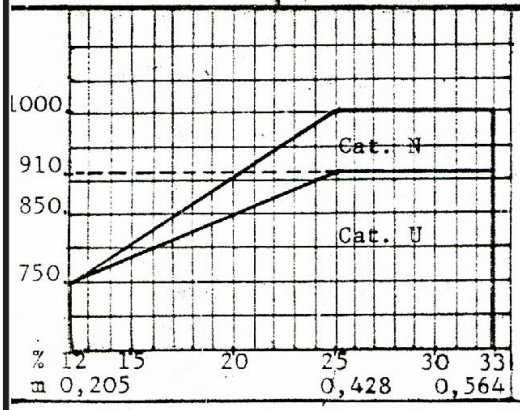

- Corde de référence : 1,71 m
- Référence verticale : bord d'attaque de la partie rectangulaire de la voilure
- Mise à niveau : longeron supérieur de fuselage horizontal
- Conditions de la pesée :
  - . Plein d'huile
  - . Equipements figurant au registe de contrôle
  - . Avion mis à niveau

Essence non utilisable 7 kg : comprise dans le poids à vide

- Longueur en m, masses en kg.

MASSE ET CENTRAGE A VIDE

	MASSE	B. DE LEVIER	MOMENT
Roue PPD	204	L^1 = 0.828	+168.912
Roue PPG	208	L' = 0.828	+172.224
Roue AV.	182	L^2 = 0.819	-149.058
Essence non utilisable	7	1.12	+ 7.84
AVION VIDE	601	X = 0.332	199.918

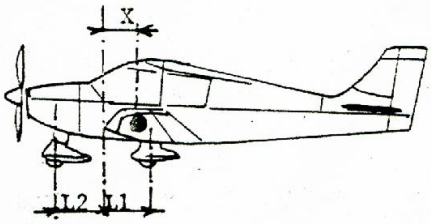

● Centre de gravité

19,4 %

CENTRAGE EXTREME AVANT				CE TRAGE EXTREME ARRIERE (1)			
Elément	Masse	B. de levier	Moment	Avion vide	601	0,332	199,9
Avion vide	601	0,332	199,918	Pilote	77	0,41	31,57
Pilote	77	0,41	31,57	Places AR	154	1,19	183,26
Essence mini.	18,8	1,12	21,06	Essence	72	1,12	80,64
Avion en charge	**696,8**	**0,362**	**252.548**	Avion en charge	**904**	**0,548**	**495.388**

Conclusions :

(1) *Pour l'amport de bagages dans le coffre et d'essence supplémentaire (si l'avion est équipé d'un réservoir supplémentaire) vérifier le centrage.*

En cas de possibilité de dépassement des limites vérifiées ci-dessus remplir le tableau ci-contre, sinon barrer cette case.

TABLEAU DE CHARGEMENT

Carburant	Masse pass. (2)	Bagages (3)

(2) en plus du pilote
(3) facultatif

Date et Visa : 24.7.1992

Bureau VERITAS (le cas échéant)

AIRCRAFT FLIGHT MANUAL SUPPLEMENT

No. 7261-011

for Flarm Collision Warning Device Garrecht TRX 1500A

A/C Make:	**Avions Pierre Robin**
A/C Model:	**DR 400/ 140B**
A/C S/N:	**1916**
Registration:	**HB-KCJ**

This Supplement must be attached to the basic Airplane Flight Manual. It describes the operating procedures for a fix installed Garrecht FLARM Collision Warning System and its interfaces in accordance with the FLARM/FLOICE Installation FOCA Policy 1.6 (42-00.02) or later versions.

The information contained herein supplements or supersedes the basic Airplane Flight Manual only in those areas listed herein. For limitations, procedures, and performance information not contained in this document, consult the basic Airplane Flight Manual.

This Flight Manual Supplement Revision is EASA approved under:
EASA CS STAN, CS-SC051a.

Log of Revisions

Rev.-Nr.	Pages	Date	Remarks/Change	
Original Issue	1 - 10	03.03.2017	Complete Supplement	

Table of Contents

SECTION ..... **PAGE**

1 GENERAL 4

2 OPERATING LIMITATIONS 5

3 EMERGENCY PROCEDURES 6

4 NORMAL PROCEDURES 4

5 PERFORMANCE 8

6 WEIGHT AND BALANCE 8

7 SYSTEM DESCRIPTIONS 10

SECTION 1
GENERAL

The gliding scene has been confronted since years to dramatic mid air collision accidents. With the extreme fine shape and relatively high cruise speed of modern gliders, the human vision has reached its limit of detection. Another aspect is the airspace restrictions to VFR that creates an augmentation of traffic density in certain areas and the associated airspace complexity that request more pilot attention on the navigation material. These have a direct impact on the probability of collision also affecting powered aircraft or rotorcraft operations.
These equipments in the general aviation are not required by technical specifications or by operation regulations, but are recognized by the regulators as an important step toward improved aviation safety. Therefore they are not considered as essential for flight and may be used for "situational awareness only" on basis of non interference to certified equipment required for safe flight/landing and no hazard to the persons on board.

Correct antenna installation has a great effect on the transmission/receiving range. The pilot shall care that no masking of the antenna occurs especially when the antennas (GPS, ADS-B and FLARM) are located in the cockpit.
Garrecht FLARM will only give warnings of other aircraft that are likewise equipped with a compatible unit and from aircraft equipped with ADS-B-OUT (1090ES), Mode-C and Mode-S transponders (if interrogated by ground radar or TCAS). Garrecht FLARM is not detected by ACAS/ TCAS/TPAS or Air Traffic Control. Likewise Garrecht FLARM does not communicate with FIS-B or TIS-B systems.
The software version must be regularly updated as per the instructions given in the Garrecht FLARM manufacturer installation/operation manual. If a version mismatch exists, error information is displayed during the equipment Power-ON and the system will not become operational.

An FLARM on/off switch provides ready disconnection of the Garrecht FLARM Traffic system from the electrical bus in case of fume, fire, interferences or when flying over territories where the SRD frequency is not available for air-air communication.

For further information and comprehensive operating instructions, please reference the current issue of the TRX-1500A user manual and the user manual of the installed Garmin GTN 750 Display. The TRX-1500A Traffic is displayed solely on the GTN Display. Please keep in mind that the user and operating manuals must be kept on board the aircraft and be accessible to the pilot at all times. It is the pilot's responsibility to familiarize him or herself with the operation, characteristics and limitations of the TRX-1500A System.

SECTION 2
OPERATING LIMITATIONS

2.1 This Garrecht FLARM installation is compliant for "situation awareness only".

The following placard must be installed on the instrumental panel, at the proximity of the interfaced FLARM Traffic display

FLARM for Situation Awareness only

2.2 Maneuvering must not be based solely on the use of the information presented on the Garrecht FLARM / Traffic Sensor GTN display or aural annunciations. Garrecht FLARM / Traffic Sensor does not give any Resolution Advisories (RA) on avoiding action. The azimuth and height accuracy of the computed traffic cannot always provide reliable warnings and only the most threatening traffic is announced. Therefore it is the pilot responsibility to evaluate by any means the real traffic position and altitude, the obstacle shape, the terrain and the meteorological situation prior executing any evasion maneuver.

Under no circumstances should a pilot or crewmember adopt different tactics or deviate from the normal principles of safe airmanship.

2.3 It is the pilot's responsibility to verify prior entering any states territory that the SRD frequency is permitted for use in air-air communication. When such an acceptance does not explicitly or implicitly exist, the equipment shall be turned OFF. This verification is part of the flight planning.

2.4 The pilot shall not intentionally generate uncoordinated warnings that might frighten other aircraft's pilot. Any intentional maneuver of this kind has to be carefully coordinated and agreed in advance. Unexpected reactions might be especially hazardous when lateral, vertical or time separations are small.

2.5 The TRX-1500A will warn only of the target that it has calculated to be most dangerous. The Traffic Sensor may not always be able to give reliable warnings based on the relative bearing. The system may under certain conditions give false warnings or may give no warning at all.

SECTION 3
EMERGENCY PROCEDURES

In case of Fire, Smoke, electrical burning smells or electromagnetic Interferences follow the Emergency procedure of the basic AFM.

The dedicated Garrecht FLARM switch will help to rapidly determine if the Garrecht FLARM / Traffic Sensor installation is faulty or not, allowing to resume essential equipments as per the Emergency procedure of the basic Aircraft Flight Manual. The Garrecht FLARM / Traffic Sensor is powered by the aircraft electrical bus. In case of malfunction turn the Garrecht FLARM / Traffic Sensor System off and pull the dedicated FLARM Circuit Breaker, located in the CB Section of the aircraft

SECTION 4
NORMAL PROCEDURES

4.1 General

The Garrecht TRX-1500A also has no separate controls and the Traffic information's will be solely displayed on the Garmin GTN 750, located in the radio stack.
Targets (other aircraft), with an active FLARM compatible system or an active (being interrogated by air traffic control) transponder, are displayed on the GTN as soon as the targets are thought to be a possible threat. Which target is displayed and how targets are displayed is explained in the current issue of the TRX-1500A user manual.
The TRX-1500A was designed only to assist the pilot and may not always give reliable warnings. With the exception of periodically transmitting ADS-B Out transponders, it cannot identify transponder signals that are not currently being interrogated by air traffic control or are out of range of Secondary Surveillance Radar (SSR) stations.
The TRX-1500A gives no Resolution Advisories (RA). Which action, if any, is required remains the sole responsibility of the pilot in command. These actions should be based on proper airspace observation.
It is recommended to carry the Garrecht FLARM / Traffic Sensor Operating Manual, current revision on board the aircraft. To make good use of the information contains in this manual the pilot should know the hardware version, the software version, the serial number and the obstacle database name currently installed in the Garrecht FLARM / Traffic Sensor.

4.2 Self-test

To switch on the Garrecht FLARM / Traffic Sensor, the aircraft electrical power shall be available on the corresponding bus and the unit must be turned ON. After switching on, the System performs a self-test routine. Detailed description of the power on procedure can be found in the current Garrecht FLARM / Traffic Sensor Operating manual
When Garrecht FLARM / Traffic Sensor shifts to normal operation it waits until it has acquired an adequate GPS position fix. When switching on the unit after a long break or in a totally new location, this procedure can take several minutes. Without a proper GPS position fix, the unit is not ready for operation.
Before departure the pilot should ensure that the System is "operational" (refer to the Operating Manual).

4.3 Operation Modes

Garrecht FLARM / Traffic Sensor operates in several modes. Detailed operation descriptions can be found in the current operating manual. While warnings are suppressed, Garrecht FLARM / Traffic Sensor nevertheless continues to transmit signals for reception by other aircraft.

4.4 Line of sight

Compatible FLARM/FLOICE/PowerFLARM / Traffic Sensor units and Transponders must be within range in order to provide a warning. The range is very much determined by the type, installation and position of the radio antennas, plus the relative positions of the two aircraft. There is no FLARM/FLOICE/PowerFLARM / Traffic Sensor signal between two aircraft on opposite sides of the same mountain.

4.5 GPS signal quality

Garrecht FLARM / Traffic Sensor has to know its current position in order to operate. For this reason, PowerFLARM / Traffic Sensor will only operate in the presence of good quality three-dimensional GPS reception. GPS reception is greatly influenced by the installation and position of the antenna, and aircraft attitude. This is particularly true during turns, when flying close to mountain slopes and in areas known for poor reception. If the installation is poor the GPS signal quality may be reduced. In particular, there can be rapid degradation of height calculations. Garrecht FLARM / Traffic Sensor resumes operation as soon as the GPS reception quality is adequate.

4.6 Predicted flight path and accuracy

When close up, when two aircraft are at the same or similar height, or GPS reception is poor, the vertical bearing indication is imprecise and fluctuates. Garrecht FLARM / Traffic Sensor calculates the predicted flight path of the aircraft to which it is fitted for less than the next 30 seconds. This prediction is based on immediate past data, current position- and movement data, plus a movement prediction model that is optimized for the respective user. This forecast is associated with a number of uncertainties that increase with an extension of the forecast time. There is no guarantee that an aircraft will actually follow the predicted flight path. For this reason, the warning issued will not be accurate in all cases.

4.7 Effect of wind

Movements calculated by the GPS relate to a fixed system of terrestrial coordinates. In strong wind there may be a substantial difference between aircraft heading and track, leading to a distortion of the threat bearing. If the wind speed is one third of True Airspeed (TAS) and the yaw free aircraft heading is 90° out of wind, then the threat indication displayed has an error of about 18°. If the wind is very strong, the track can deviate up to 180° from heading. Under such circumstances and when circling, the warnings given are unusable.

4.8 Data protection

The transmitter has no effect on what the receiver in the other aircraft does with the data. It is possible that this data may be captured and stored by other aircraft, or by ground stations, or used for other purposes. This opens up a range of possibilities, some of which may be in the pilot's own interest, (e.g. automated generation of an sailplane launch logging system, aircraft tracking, last position recovery), while others may not be (e.g. detecting tailing of other aircraft, airspace infringements, failure to take avoiding action prior to a collision). When Garrecht FLARM / Traffic Sensor makes a transmission, the signal also bears identification.

SECTION 5
PERFORMANCE

No Change to basic flight manual

SECTION 6
WEIGHT AND BALANCE

No Change to basic flight manual

SECTION 7
SYSTEM DESCRIPTION

7.1 System description

Garrecht FLARM / Traffic Sensor receives position and movement information from an internal GPS receiver with an external GPS antenna. The predicted flight path is calculated by PowerFLARM / Traffic Sensor and the information transmitted by radio. Provided they are within receiving range, the signals are received by further aircraft also equipped with FLARM/FLOICE/PowerFLARM / Traffic Sensor or compatible devices. The incoming signal is compared with the flight path predicted by calculation for the second aircraft. At the same time, Garrecht FLARM compares the predicted flight path with known data on obstacles stored in an internal database.

The Garrecht FLARM traffic situation will be displayed on the Garmin GTN Navigator located in the Cockpit Radio Stack. The Garrecht FLARM will generate also audio messages. The PowerFLARM / Traffic Unit is connected to the aircraft audio system. The PowerFLARM / Traffic Sensor software and database can be updated via the micro USB Port on the Traffic Transceiver, located behind the cockpit panel.

This aircraft is equipped with several antennas for the Garrecht FLARM / Traffic Sensor System. One GPS antenna, one ADS-B antenna and one FLARM antenna.
The PowerFLARM / Traffic Sensor system is electrically protected by a 1 Amp. Circuit breaker located in the CB panel labelled as FLARM.
Obstacle information stored has been simplified; for example, PowerFLARM / Traffic Sensor assumes that a power wire is slung absolutely straight between two fixed points with no sag. Likewise, data for power lines does not include all intermediate masts.

7.2 Radio transmission

The Garrecht FLARM / Traffic Sensor system uses a data communication frequency in the tree Non-Specific Short Range Device (SRD), sub band f, between 868.0- 868.6 MHz and with an ERP power of less than 10 mW (duty cycle 1%). This band is ruled tor European applications in the documents ERC/REC 70-03 annex 1 (f) and ERC/DEC/(01)04. The band is free for any ground-ground applications and gets no official protection against external interferences. ITU's recommendation for this band in region 1 is "mobile except aeronautical mobile". POWERFLARM / TRAFFIC SENSOR is not considered as aeronautical mobile radio.
There are national differences in frequency allocation and operating conditions between countries. To be used for air-air application some countries require an authorization to be granted by each national communication authority. In Switzerland, BAKOM has granted this authorization for the FLARM/FLOICE/PowerFLARM / Traffic Sensor application on the 23 March 2004. On the 29 May 2005 FOCA confirmed to BAKOM, that no Radio License will be required for FLARM/FLOICE/PowerFLARM / Traffic Sensor. The aircraft commander is solely responsible for ensuring that their use of PowerFLARM / Traffic Sensor conforms to local regulations.
The radio transmission protocol employed places no limit on the number of units that may be operated within a given range. However, an increasing number of units within range is associated with a reduction in the probability that a single coded signal will be received ('graceful degradation'). The probability is small that subsequent signals will not be received from the same transmitter.

7.3 Electrical installation

This FLARM installation is protected with a Circuit Breaker, which is provided with this installation to readily disconnect the Garrecht FLARM / Traffic Sensor installation when required by Emergency or operational needs. The pilot must be confident with his electrical bus topology and the FLARM installation.

7.4 Personalized Garrecht FLARM / Traffic Sensor System overview

Below a System overview installed in this aircraft. Detailed wiring interconnection No 7261-FLARM can be found in the aircraft maintenance records.

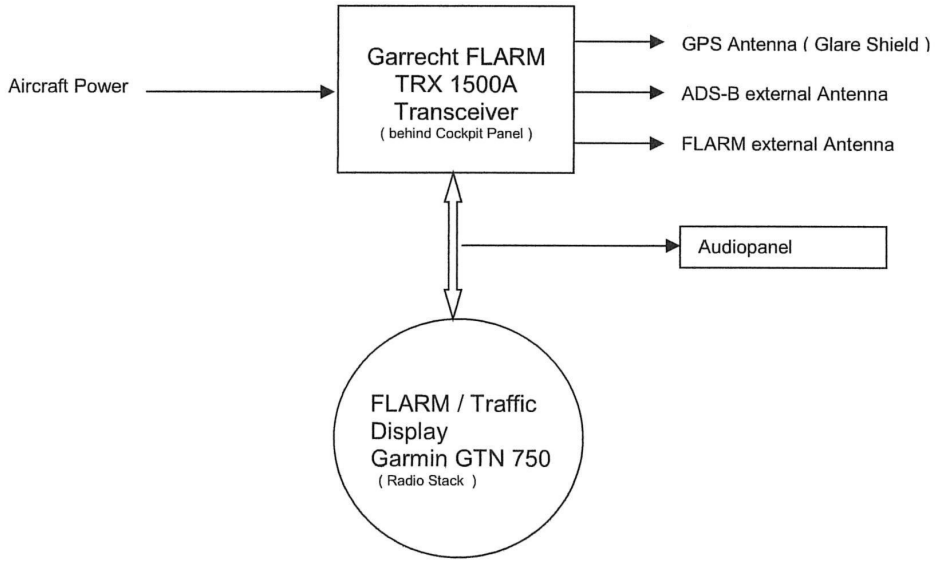

Aircraft FLIGHT MANUAL SUPPLEMENT
No.7261-012 for
Garmin GTN 750 NAV/COM/GNSS Navigation System

A/C Make :	**Avions Pierre Robin**
A/C Model :	**Dr 400/140B**
A/C S/N :	**1916**
Registration:	**HB-KCJ**

This document serves as an Airplane Flight Manual Supplement or as a Supplemental Airplane Flight Manual for the installation and operation of the Garmin GTN 750 NAV/COM/GNSS Navigation System. This document must be carried in the airplane at all times when the Garmin GTN navigation system is installed in accordance to the appropriate Garmin GTN 750 Installation Manual P/N 190-01007-A3, Rev. 10 and EASA CS-STAN: SC-SC001a, CS-SC052a and CS-SC056a.

The information contained herein supplements or supersedes the information made available to the operator by the aircraft manufacturer in the form of clearly stated placards or markings, or in the form of an approved Airplane Flight Manual, only in those areas listed herein. For limitations, procedures and performance information not contained in this document, consult the basic placards or markings, or the basic approved Airplane Flight Manual

This Flight Manual Supplement is EASA approved under:
EASA CS-STAN

Log of Revisions:

Revision -Nr.	Pages	Date	Remarks/Change
Initial Issue	1 –3	03.03.2017	Original Issue

TABLE OF CONTENT

SECTION I : GENERAL 3
SECTION II : LIMITATIONS 3
SECTION III : EMERGENCY PROCEDURES 3
SECTION IV: NORMAL PROCEDURES 3
SECTION V : PERFORMANCE 3
SECTION VI : WEIGHT AND BALANCE 3
SECTION VII : SYSTEM DESCRIPTIONS 3

SECTION I : GENERAL

The information in this supplement is EASA approved material and must be attached to the FAA approved AFMS Garmin P/N 190-01007-A5 Rev. 5 when the airplane has been modified by installation of a Garmin GTN 750 COM / GNSS Navigation System in accordance with the Garmin Installation Manual P/N 190-01007-A3, current revision

This additional Supplement is required in additional to the FAA approved AFMS Garmin P/N 190-01007-A5 Rev. 5 and EASA approved AFMS Garmin P/N 190-01007-E3, Rev 2.

The Information's contained in the above referenced supplements for the GTN 750 Installation are also applicable for this installation

SECTION II : LIMITATIONS

Limitations defined in the FAA approved AFMS Garmin P/N 190-01007-A5 Rev. 5 and EASA approved AFMS Garmin P/N 190-01007-E3, Rev 2 are applicable for this **VFR limited Installation**

SECTION III : EMERGENCY PROCEDURES

No Change.

SECTION IV: NORMAL PROCEDURES

No change.

SECTION V : PERFORMANCE

No change.

SECTION VI : WEIGHT AND BALANCE

See current weight and balance data in the AFM.

SECTION VII : SYSTEM DESCRIPTIONS

No change.

Garmin International, Inc.
1200 E. 151st Street
Olathe, KS 66062 U.S.A.

FAA APPROVED

AIRPLANE FLIGHT MANUAL SUPPLEMENT
or
SUPPLEMENTAL AIRPLANE FLIGHT MANUAL
for the
Garmin GTN 625, 635, 650, 725, or 750 GPS/SBAS Navigation System
as installed in

Robin DR 400/140B
Make and Model Airplane

Registration Number: HB-KCJ Serial Number: 1916

GPS FUNCTIONS NOT APPROVED FOR IFR NAVIGATION

This document serves as an Airplane Flight Manual Supplement or as a Supplemental Airplane Flight Manual when the aircraft is equipped in accordance with Supplemental Type Certificate SA02019SE-D for the installation and operation of the Garmin GTN 625, 635, 650, 725, or 750 GPS/SBAS Navigation System. This document must be incorporated into the FAA Approved Airplane Flight Manual or provided as an FAA Approved Supplemental Airplane Flight Manual.

The information contained herein supplements the information in the FAA Approved Airplane Flight Manual. For limitations, procedures, loading and performance information not contained in this document, refer to the FAA Approved Airplane Flight Manual, markings, or placards.

FAA Approved By: Michael Warren

Michael Warren
ODA STC Unit Administrator
Garmin International, Inc.
ODA-240087-CE

Date: 16-SEP-2016

LOG OF REVISIONS			
Revision Number	Page	Description	FAA Approved
1	All	Complete Supplement	*Michael Warren* ODA STC Unit Administrator Garmin International, Inc. ODA-240087-CE Date: *12/18/2012*
2	12	Section 2.11 • Modified limitation	*Michael Warren* ODA STC Unit Administrator Garmin International, Inc. ODA-240087-CE Date: *04/12/2013*
3	6 8 11 12 14 15 16 17 18 19 24-25 26	Table 1 • Added new functions Section 1.4 • New section Section 2.4 • Modified limitation Section 2.6 • Added wire obstacles Section 2.15 • Modified limitation Section 2.16, 2.17 & 2.18 • Added limitations Section 3.1.1 • Modified procedure, added note Section 3.2.3 • Added note Section 3.2.8 • Added Flight Stream 210 to procedure Section 4.1 • Removed telephone audio deactivation procedure Section 7.5 • Added wire obstacles Section 7.9 • Added Flight Stream 210 Section 7.10	*Michael Warren* ODA STC Unit Administrator Garmin International, Inc. ODA-240087-CE Date: *11/25/2014*

LOG OF REVISIONS			
Revision Number	Page	Description	FAA Approved
	27 30-32	• Added wire obstacles Sections 7.17-7.19 • New sections	
4	All	All Sections • Reformatted and updated sections to better coincide with the IFR AFMS. Section 2 • Added RF leg description and limitations • Added QFE limitations • Added Autopilot limitations • Added polar operation limitation • Added text regarding new data units in the GTN • Added Fuel Range Ring description and limitations • Added Flight Stream 210 limitation Section 4 • Added autopilot capability assessment regarding RF legs • Updated installer descriptions of configuration checkboxes • Added Search and Rescue autopilot note • Added RNP 1.0 installation options Section 7 • Added GMA 35c information • Removed references to GDL 88 and replaced with generic ADS-B • Added GWX 70 turbulence detection note • Added GTN crossfill information	*Michael Warren* ODA STC Unit Administrator Garmin International, Inc. ODA-240087-CE Date : *02/25/2016*
5	1 3-5 6 6	Table 1 • Added Flight Stream 510 data Section 1.5 • Added definitions Section 2.1 • Updated CRG Revisions Table 2 • Added Flight Stream 510 line	See Page i

LOG OF REVISIONS			
Revision Number	Page	Description	FAA Approved
	7	Section 2.4 • MMC additions	
	10	Section 2.22 • Fixed error	
	11	Sections 2.23-2.25 • New Sections	
	14	Section 3.2.6 • Reworded and added additional text	
	14-15	Sections 3.2.7-3.2.11 • New Sections • Renumbered sections	
	19	Section 4.7 • New section	
	21	Section 7.1 • New revision numbers	
	24	Section 7.9 • Added Flight Stream 510	
	25	Section 7.10 • Reworded	
	26	Table 3 • Added PTC	
	30	Section 7.19 • Flight Stream 510 content added	
	33-34	Sections 7.25-7.26 • New sections	

Table of Contents

SECTION		PAGE
Section 1. General		**1**
1.1	Garmin GTN Navigators	1
1.2	System Capabilities	3
1.3	Electronic Flight Bag	3
1.4	Electronic Checklists	3
1.5	Definitions	3
Section 2. LIMITATIONS		**6**
2.1	Cockpit Reference Guide	6
2.2	Kinds of Operation	6
2.3	Applicable System Software	6
2.4	MMC / SD Database Cards	7
2.5	Ground Operations	7
2.6	Barometric Setting	7
2.7	Autopilot Coupling	7
2.8	Terrain Proximity Function (All Units)	7
2.9	TAWS Function (Optional)	8
2.10	Polar Operations	8
2.11	Datalink Weather Display (Optional)	8
2.12	Traffic Display (Optional)	9
2.13	StormScope® Display (Optional)	9
2.14	Flight Planner/Calculator Functions	9
2.15	Fuel Range Rings	9
2.16	Glove Use / Covered Fingers	9
2.17	Demo Mode	10
2.18	Active Weather RADAR	10
2.19	Telephone Audio	10
2.20	Multi Crew Aircraft (GMA 35 Only)	10
2.21	Wire Obstacle Database	10
2.22	Portable Electronic Devices	10
2.23	Database Updates	11
2.24	Charts Database (Dual GTN7XX)	11
2.25	Automatic Speech Recognition	11
Section 3. EMERGENCY PROCEDURES		**12**
3.1	Emergency Procedures	12
3.2	Abnormal Procedures	13
Section 4. NORMAL PROCEDURES		**16**
4.1	Unit Power On	16
4.2	Before Takeoff	16
4.3	HSI and EHSI Operation	17
4.4	Autopilot Operation	17
4.5	Coupling the Autopilot during approaches	18
4.6	Coupling the Autopilot during Search and Rescue Operations	19
4.7	Database Conflict Resolution	19
Section 5. PERFORMANCE		**20**

Section 6. WEIGHT AND BALANCE **20**
Section 7. SYSTEM DESCRIPTIONS **21**
7.1 Pilot's Guide 21
7.2 Leg Sequencing 21
7.3 Auto ILS CDI Capture 21
7.4 Activate GPS Missed Approach 21
7.5 Terrain Proximity and TAWS 22
7.6 GMA/35c Audio Panel (Optional) 23
7.7 Traffic System (Optional) 23
7.8 StormScope® (Optional) 24
7.9 Power 24
7.10 Databases and Flight Plan Waypoints/Procedures 25
7.11 External Switches 26
7.12 Airspace Depiction and Alerts 26
7.13 Garmin ADS-B Traffic System Interface (Optional) 27
7.14 GWX 70 Weather Radar (Optional) 28
7.15 Charts (Optional) 28
7.16 Transponder Control (Optional) 28
7.17 Telephone Audio (Optional) 28
7.18 Depiction of Obstacles and Wires 29
7.19 Flight Stream 210/510 (Optional) 30
7.20 Map Page 31
7.21 User Defined Waypoints 31
7.22 Times and Distances 31
7.23 GTN-GTN Crossfill 32
7.24 Direct-To Operations 32
7.25 Automatic Speech Recognition (ASR) 33
7.26 European Visual Reporting Points 34

Section 1. General

1.1 Garmin GTN Navigators

The Garmin GTN navigation system is a GPS system with a Satellite Based Augmentation System (SBAS), comprised of one or more Garmin TSO-C146c GTN 625, 635, 650, 725, or 750 navigator(s) and one or more Garmin approved GPS/SBAS antenna(s).

	GTN 625	GTN 635	GTN 650	GTN 725	GTN 750 X
GPS SBAS Navigation **(Not approved for IFR navigation)**	X	X	X	X	X
VHF Com Radio, 118.00 to 136.990, MHz, 8.33 or 25 kHz increments		X	X		X
VHF Nav Radio, 108.00 to 117.95 MHz, 50 kHz increments			X		X
LOC and Glideslope non-precision and precision approach guidance for Cat 1 minimums, 328.6 to 335.4 MHz tuning range			X		X
Moving map including topographic, terrain, aviation, and geopolitical data	X	X	X	X	X
Display of datalink weather products, SiriusXM, FIS-B, Connext (all optional)	X	X	X	X	X
Control and display of airborne weather radar (optional)				X	X
Display of terminal procedures data (optional)				X	X
Display of traffic data, including ADS-B (optional)	X	X	X	X	X
Display of StormScope® data (optional)	X	X	X	X	X
Display of marker beacon annunciators (optional)	X*	X*	X*	X	X
Remote audio panel control (optional)				X	X
Remote transponder control (optional)	X	X	X	X	X
Remote audio entertainment datalink control (optional	X	X	X	X	X
TSO-C151c Class B TAWS (optional)	X	X	X	X	X
Supplemental calculators and timers	X	X	X	X	X
Control of GSR 56 Iridium Satellite Phone and SMS Text (optional)	X	X	X	X	X
Control of Flight Stream 210 (optional)	X	X	X	X	X
Control of Flight Stream 510 (optional)	X	X	X	X	X

* Display of marker beacon annunciations on the GTN 6XX is only possible when installed with a Garmin GMA 350 audio panel.

Table 1 – GTN Functions

The GPS navigation functions and optional VHF communication and navigation radio functions are operated by dedicated hard keys, a dual concentric rotary knob, or the touchscreen.

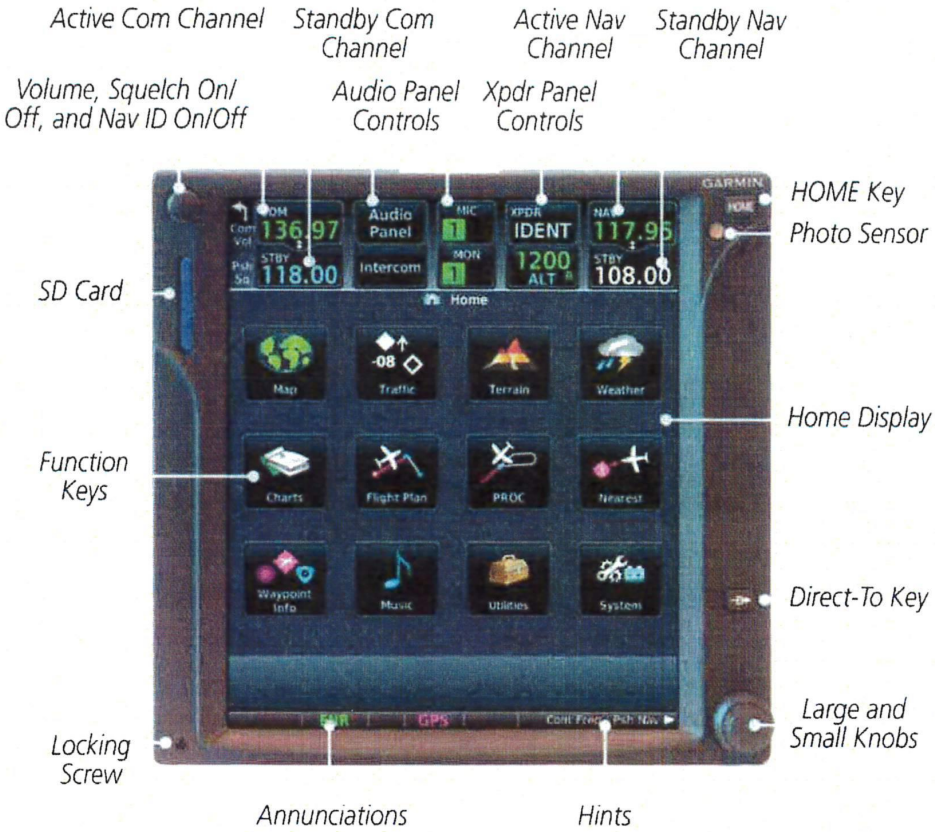

Figure 1 - GTN 750 Control and Display Layout

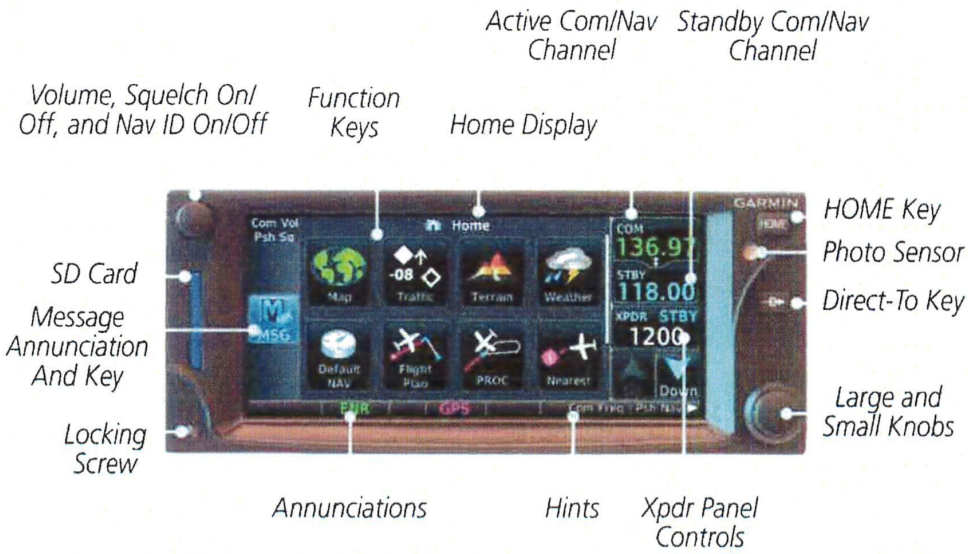

Figure 2 - GTN 635/650 Control and Display Layout

1.2 System Capabilities

This Flight Manual Supplement documents the installed capabilities of the GTN specific to the aircraft for which this manual is created.

NOTE

In sections which contain a square checkbox (□) the installer will have placed an "X" in the boxes next to the capabilities applicable to the installation.

The GTN system and associated navigation interface in this aircraft have the following capability, in addition to the core multifunction display capability:

☒ VHF Communication Radio
☒ Primary VHF Navigation
☐ TSO-C151c Terrain Awareness and Warning System – See section 1.1

1.3 Electronic Flight Bag

The GTN 750/725 are operationally suitable as Class 3 Hardware, Type B Software in accordance with AC 120-76B EFB electronic aeronautical information when using current FliteChart or ChartView data.

Use of the Flight Stream interface and data for the purpose of required Electronic Flight Bag applications is not approved as part of this STC. Additional approval may be required to obtain operational approval for use of the Flight Stream and supplied data to supplement EFB systems.

1.4 Electronic Checklists

The GTN checklist functions are designed to DO-178B software design assurance level B and support a minor failure classification. While this STC does not grant operational approval for operators requiring such approval, there are no limitations precluding operators from obtaining their own operational approval for the checklist function.

1.5 Definitions

The following terminology is used within this document:

ADF:	Automatic Direction Finder
ADS-B:	Automatic Dependent Surveillance Broadcast
AEG:	Aircraft Evaluation Group (FAA)
APR:	Approach
CDI:	Course Deviation Indicator
DME:	Distance Measuring Equipment
EFB:	Electronic Flight Bag
EGNOS:	European Geostationary Navigation Overlay Service
EHSI:	Electronic Horizontal Situation Indicator
FIS-B:	Flight Information Services Broadcast

GAGAN: GPS Aided GEO Augmented Navigation
GNSS: Global Navigation Satellite System
GPS: Global Positioning System
GPSS: GPS Roll Steering
GTN: Garmin Touchscreen Navigator
HOT: Hazardous Obstacle Transmission wires
HSI: Horizontal Situation Indicator
IAP: Instrument Approach Procedure
IFR: Instrument Flight Rules
ILS: Instrument Landing System
IMC: Instrument Meteorological Conditions
LDA: Localizer Directional Aid
LNAV: Lateral Navigation
LNAV +V: Lateral Navigation with advisory Vertical Guidance
L/VNAV: Lateral/Vertical Navigation
LOC: Localizer
LOC-BC: Localizer Backcourse
LP: Localizer Performance
LPV: Localizer Performance with Vertical Guidance
LP +V: Localizer Performance with Advisory Vertical Guidance
MLS: Microwave Landing System
MMC: Multi-Media Card
NOTAM: Notice to Airmen
OBS: Omni Bearing Selector
PED: Portable Electronic Device
RAIM: Receiver Autonomous Integrity Monitoring
RMT: Remote
RNAV: Area Navigation
RNP: Required Navigational Performance
SAR: Search and Rescue
SBAS: Satellite Based Augmentation System
SD: Secure Digital
SDF: Simplified Directional Facility
SUSP: Suspend
TACAN: Tactical Air Navigation System
TAS: Traffic Awareness System
TAWS: Terrain Awareness and Warning System
TCAS: Traffic Collision Avoidance System

TFR:	Temporary Flight Restriction
TIS:	Traffic Information Service
VHF:	Very High Frequency
VFR:	Visual Flight Rules
VLOC:	VOR/Localizer
VMC:	Visual Meteorological Conditions
VOR:	VHF Omnidirectional Range
VRP:	Visual Reporting Point
WAAS:	Wide Area Augmentation System
WFDE:	WAAS Fault Data Exclusion
XFR:	Transfer

Section 2. LIMITATIONS

2.1 Cockpit Reference Guide

The Garmin GTN 6XX or GTN 7XX Cockpit Reference Guide, part number and revision listed below (or later revisions), *must* be immediately available to the flight crew whenever navigation is predicated on the use of the GTN.

- GTN 6XX Cockpit Reference Guide P/N 190-01004-04 Rev K
- GTN 7XX Cockpit Reference Guide P/N 190-01007-04 Rev J

2.2 Kinds of Operation

This AFM supplement does not grant approval for IFR operations to aircraft limited to VFR operations.

The GPS navigation capability of this unit cannot be used as primary navigation for IFR operations.

This system is placarded in close proximity to the GTN: "**GPS LIMITED TO VFR USE ONLY**".

2.3 Applicable System Software

This AFMS/AFM is applicable to the software versions shown in Table 2.

The Main and GPS software versions are displayed on the start-up page immediately after power-on. All software versions displayed in Table 2 can be viewed on the System – System Status or Connext Setup pages.

Software Item	Software Version
Main SW Version	6.21
GPS SW Version	5.2
Com SW Version	2.20
Nav SW Version	6.02
Flight Stream 210	2.40
Flight Stream 510	2.10

Table 2 - Software Versions

2.4 MMC / SD Database Cards

It is required that the SD database card or Flight Stream 510 (MMC) be present in the GTN at all times. The SD or MMC device must not be removed or inserted during flight or while the GTN is powered on.

NOTE

Removal of the SD or MMC device will result in certain features and databases not being available and may slow system performance.

2.5 Ground Operations

Do not use SafeTaxi or ChartView functions as the basis for ground maneuvering. SafeTaxi and ChartView functions do not comply with the requirements of AC 20-159 and are not qualified to be used as an airport moving map display (AMMD). SafeTaxi and ChartView are to be used by the flight crew to orient themselves on the airport surface to improve flight crew situational awareness during ground operations.

2.6 Barometric Setting

The barometric altimeter setting used for any barometric corrected altitude source interfaced to the GTN must be set appropriate to the altitude type depicted on the procedure (QNH or QFE).

2.7 Autopilot Coupling

The flight crew may fly all phases of flight based on the navigation information presented to the flight crew; however, not all modes may be coupled to the autopilot. All autopilots may be coupled in Oceanic (OCN), Enroute (ENR), and Terminal (TERM) modes.

This installation is limited to:

- ☐ Lateral coupling only for GPS approaches. Coupling to the vertical path for GPS approaches is not authorized.

It is possible to create flight plan waypoint sequences, including Search and Rescue patterns, which exceed the autopilot's bank angle capabilities. The pilot shall monitor autopilot performance with regard to flight path deviation.

2.8 Terrain Proximity Function (All Units)

Terrain, point obstacle, and wire obstacle information appears on the map and terrain display pages as red and amber terrain, obstacles, or wires and is depicted for advisory use only. Aircraft maneuvers and navigation must not be predicated upon the use of the terrain display. Terrain, obstacle and wire information is advisory only and is not equivalent to warnings provided by TAWS.

The terrain display is intended to serve as a situational awareness tool only. By itself, it may not provide either the accuracy or the fidelity on which to base decisions and plan maneuvers to avoid terrain or obstacles.

NOTE

Terrain and TAWS are separate features and mutually exclusive. If "TAWS B" is shown on the bottom right of the dedicated terrain page, then TAWS is installed.

2.9 TAWS Function (Optional)

Flight crews are authorized to deviate from their current ATC clearance to the extent necessary to comply with TAWS warnings. Navigation must not be predicated upon the use of TAWS.

If an external TAWS annunciator panel is installed in the aircraft, this annunciator panel must be fully functional in order to use the TAWS system.

NOTE

Terrain and TAWS are separate features and mutually exclusive. If "TAWS B" is shown on the bottom right of the dedicated terrain page, then TAWS is installed.

2.10 Polar Operations

Operating the GTN for primary navigation for latitudes above 89.00° N and below 89.00° S is prohibited.

2.11 Datalink Weather Display (Optional)

This limitation applies to datalink weather products from SiriusXM via a GDL 69/69A, FIS-B via a GDL 88 or GTX 345, and Connext via a GSR 56.

Do not use data link weather information for maneuvering in, near, or around areas of hazardous weather. Information provided by data link weather products may not accurately depict current weather conditions.

Do not use the indicated data link weather product age to determine the age of the weather information shown by the data link weather product. Due to time delays inherent in gathering and processing weather data for data link transmission, the weather information shown by the data link weather product may be significantly older than the indicated weather product age.

Do not rely solely upon data link services to provide Temporary Flight Restriction (TFR) or Notice to Airmen (NOTAM) information. Not all TFRs and NOTAMS can be depicted on the GTN.

Datalink text weather is decoded for the convenience of the pilot, however it is possible that the decoding may be affected by anomalies in the data or differences in the units of measure between the decoding system and the text weather source. All text weather displayed on the GTN also includes the raw weather text for pilot review.

2.12 Traffic Display (Optional)

Traffic may be displayed on the GTN when connected to an approved optional TCAS I, TAS, TIS, or ADS-B traffic device. These systems are capable of providing traffic monitoring and alerting to the flight crew. Traffic shown on the display may or may not have traffic alerting available. The display of traffic is an aid to visual acquisition and may not be utilized for aircraft maneuvering.

Traffic is displayed in feet regardless of the unit settings for altitude. If the units for altitude are different than feet, a "FT" label will appear on the traffic icon on and main map page, and the dedicated traffic page will include an "ALT IN FT" notification.

2.13 StormScope® Display (Optional)

StormScope® lightning information displayed by the GTN is limited to supplemental use only. The use of the StormScope® lightning data on the display for hazardous weather (thunderstorm) penetration is prohibited. StormScope® lightning data on the display is intended only as an aid to enhance situational awareness of hazardous weather, not penetration. It is the flight crew's responsibility to avoid hazardous weather using official weather data sources.

When the GTN StormScope® page is operating without a heading source, as indicated by the "HDG N/A" label at the upper right corner of the StormScope® page, strikes must be cleared after each heading change.

2.14 Flight Planner/Calculator Functions

The Fuel Planning page uses Fuel on Board or Fuel Flow as received from an on board fuel totalizer, as entered by the pilot at system startup, or as entered by the pilot when on the Fuel Planning page. This *is not* a direct indication of actual aircraft fuel flow or fuel on board and those values are only used for the Fuel Planning page. The fuel required to destination is only a calculated and predicted value based on the data entered into the planner. It is not a direct indication of how much fuel the aircraft will have upon reaching the destination.

2.15 Fuel Range Rings

The fuel range rings displayed on the moving map are intended for situational awareness and do not represent a direct indication of endurance or fuel remaining. The distance between the segmented green reserve ring and the yellow zero fuel ring is 45 minutes by default. The reserve value can be changed from the GTN map setup menu.

Fuel range data is derived by the interfaced fuel totalizer data. Data entered in the Fuel Planning pages will not update the fuel range ring.

2.16 Glove Use / Covered Fingers

No device may be used to cover fingers used to operate the GTN unless the Glove Qualification Procedure located in the Pilot's Guide/Cockpit Reference Guide has been successfully completed. The Glove Qualification Procedure is specific to a pilot / glove / GTN 725, 750 or GTN 625, 635, 650 combinations.

2.17 Demo Mode

Demo mode may not be used in flight under any circumstances.

2.18 Active Weather RADAR

Radar is broadcasting energy while in Weather or Ground mapping modes. If the GTN system is configured to control an airborne weather radar unit, observe all safety precautions, including:

- Do not operate in the vicinity of refueling operations.
- Do not operate while personnel are in the vicinity (approximately 20 feet) of the radar sweep area.

CAUTION

If a radar system is installed, it generates microwave radiation and improper use, or exposure, may cause serious bodily injury. Do not operate the radar equipment until you have read and carefully followed the safety precautions and instructions in the weather radar user manual and/or pilot's guide.

2.19 Telephone Audio

Telephone audio must not be distributed to the pilot or co-pilot unless a phone call is active.

CAUTION

Failure to turn off telephone audio when the telephone is not in use may result in telephone ringer or text message aural notifications being received during critical phases of flight.

2.20 Multi Crew Aircraft (GMA 35 Only) *

For aircraft type certified with more than one required pilot, or operations requiring more than one pilot, the "Group Co-Pilot with Passenger" audio panel option must not be activated. This option is found in the Intercom Setup Menu when a Garmin GMA 35 audio panel is installed.

2.21 Wire Obstacle Database

Only the "Obstacle/HOT Line" database may be used. Use of the "Obstacle/Wire" database is prohibited. The database version can be viewed on the start-up database verification or System- System Status pages.

2.22 Portable Electronic Devices

This STC does not relieve the operator from complying with the requirements of 91.21 or any other operational regulation regarding portable electronic devices.

The Flight Stream interface and data provided to a portable electronic device is not approved to replace any aircraft display equipment, including navigation or traffic/weather display equipment.

---

* Includes GMA 35 and GMA 35c Audio Panels

2.23 Database Updates

Database updates via MMC / SD card or Flight Stream wireless transfers must be done while the aircraft is on the ground and stationary. In-flight database transfers or updates are prohibited in flight unless part of the Database SYNC function that occurs in the background to move databases from one LRU to another.

2.24 Charts Database (Dual GTN7XX)

When the aircraft installation includes 2 GTNs capable of displaying charts (GTN 700, 725 or 750) and crossfill is enabled between the GTNs, the GTNs must have identical charts types (ChartView or FliteCharts) and charts cycles installed. Failure to have identical charts could affect the chart lookup features and automatic chart selection.

2.25 Automatic Speech Recognition

Pilots may not use the ASR function to operate the GTN/GMA unless they have completed the ASR Qualification Procedure located in the GTN Cockpit Reference Guide successfully. The ASR Qualification Procedure is specific to each pilot / headset / aircraft combination.

Section 3. EMERGENCY PROCEDURES

3.1 Emergency Procedures

3.1.1 TAWS WARNING

Red annunciator and aural "PULL UP":

Autopilot ..... **DISCONNECT**
Aircraft Controls ..... **INITIATE MAXIMUM POWER CLIMB**
Airspeed ..... **BEST ANGLE OF CLIMB SPEED**

After Warning Ceases:

Altitude ..... **CLIMB AND MAINTAIN SAFE ALTITUDE**
Advise ATC of Altitude Deviation, if appropriate.

NOTE

Only vertical maneuvers are recommended, unless either operating in visual meteorological conditions (VMC), or the flight crew determines, based on all available information, that turning in addition to the vertical escape maneuver is the safest course of action, or both.

NOTE

TAWS annunciators external to the GTN may not indicate the exact threat causing the alert. Example: WIRE alerts may be annunciated as TERR or OBSTACLE on external devices.

3.2 Abnormal Procedures

3.2.1 LOSS OF COM RADIO TUNING FUNCTIONS

If alternate COM is available:
Communications ..... **USE ALTERNATE COM**

If no alternate COM is available:
COM RMT XFR key (if installed)..... **PRESS AND HOLD FOR 2 SECONDS**

NOTE

This procedure will tune the active COM radio the emergency frequency 121.5, regardless of what frequency is displayed on the GTN. Certain failures of the tuning system will automatically tune 121.5 without flight crew action.

3.2.2 LOSS OF AUDIO PANEL FUNCTIONS (GMA 35 Only)†

Audio Panel Circuit Breaker ..... **PULL**

NOTE

This procedure will force the audio panel into fail safe mode which provides only the pilot with communications and only on a single COM radio. If any non GTN 750 COM is installed, communication will be only on that radio. If only a GTN 750 is installed in the aircraft, then the pilot will have only the GTN 750 COM available. No other audio panel functions including aural alerting and the crew and passenger intercom will function.

3.2.3 TAWS CAUTION (Terrain or Obstacle Ahead, Sink Rate, Don't Sink)

When a TAWS CAUTION occurs, take corrective action until the alert ceases. Stop descending or initiate either a climb or a turn, or both as necessary, based on analysis of all available instruments and information.

NOTE

TAWS annunciators external to the GTN may not indicate the exact threat causing the alert. Example: WIRE alerts may be annunciated as TERR or OBSTACLE on external devices.

---

† Includes GMA 35 and GMA 35c Audio Panels

3.2.4 TAWS INHIBIT

The TAWS Forward Looking Terrain Avoidance (FLTA) and Premature Descent Alerts (PDA) functions may be inhibited to prevent alerting, if desired. Refer to GTN Cockpit Reference Guide for additional information.

To Inhibit TAWS:

Home Hardkey ..... **PRESS**
Terrain Button ..... **PRESS**
Menu Button ..... **PRESS**
TAWS Inhibit Button ..... **PRESS TO ACTIVATE**

3.2.5 TER N/A and TER FAIL

If the amber **TER N/A** or **TER FAIL** status annunciator is displayed, the system will no longer provide TAWS alerting or display relative terrain and obstacle elevations. The crew must maintain compliance with procedures that ensure minimum terrain and obstacle separation.

3.2.6 DATA SOURCE - HEADING SOURCE INOPERATIVE OR CONNECTION TO GTN LOST MESSAGE

Without a heading source to the GTN, the following limitations apply:

- Roll steering will not be provided to the autopilot for heading legs. The autopilot must be placed in HDG mode for heading legs.
- Map cannot be oriented to Heading Up.
- Overlaying traffic data from a TAS/TCAS I or Garmin ADS-B-IN unit interfaced to an on board traffic system will not be displayed on the main map display. The flight crew must use the dedicated traffic page on the GTN system to display TAS/TCAS I or Garmin ADS-B-IN traffic data.
- All overlaying StormScope® data on the main map display. The flight crew must use the dedicated StormScope® page on the GTN system to display StormScope® data.
- Onboard weather radar overlay on the main map will not be displayed. The flight crew must utilize the dedicated weather radar page on the GTN system to view weather radar data from the onboard weather radar.

StormScope® must be operated in accordance with Section 7.8 when no heading is available.

3.2.7 ASR (VOICE COMMAND) SYSTEM FAILURES

In the event the ASR system fails and there is a need to disable the voice command inputs to the GTN:

To Disable ASR:

Home Hardkey ..... **PRESS**
System Button ..... **PRESS**
Voice Commands Button ..... **PRESS**
Voice Commands Enable Button ..... **TOGGLE OFF**

3.2.8 LOSS OF GTN TOUCH CONTROL

In the event the GTN becomes unusable due to uncommanded page changes, the ASR function may be the source.

To Disable ASR:

Audio Panel Circuit Breaker ..... **PULL**
Home Hardkey ..... **PRESS**
System Button ..... **PRESS**
Voice Commands Button ..... **PRESS**
Voice Commands Enable Button ..... **TOGGLE OFF**
Audio Panel Circuit Breaker ..... **PUSH**

3.2.9 DATA SOURCE – PRESSURE ALTITUDE SOURCE INOPERATIVE OR CONNECTION TO GTN LOST MESSAGE

Without a barometric corrected altitude source to the GTN, the following features will not operate:

- Automatic leg sequencing of legs requiring an altitude source. The flight crew must manually sequence altitude legs, as prompted by the system.

3.2.10 UNRECOVERABLE LOSS OF ALL ELECTRICAL GENERATORS OR ALTERNATORS

Remove power from all equipment which is not necessary for flight, including GTN #2 (NAV/GPS 2, COM 2) and the Flight Stream 210 (BT LINK), if installed.

3.2.11 IN-AIR RESTART OF GTN

In the event of a GTN restart in the air, the crew should utilize the CANCEL button if presented with the database update screen after the GTN is restarted. This will ensure restoration of the navigation functions as soon as possible.

Section 4. NORMAL PROCEDURES

Refer to the Cockpit Reference Guide defined in Section 2.1 of this document or the Pilot's Guide defined in Section 7.1 for normal operating procedures and a complete list of system messages and associated flight crew actions. This includes all GPS operations, VHF communication and navigation, traffic, data linked weather, StormScope®, TAWS, and Multi-Function Display information.

The GTN requires a reasonable degree of familiarity to avoid becoming too engrossed at the expense of basic instrument flying in IMC and basic see-and-avoid in VMC. Garmin provides training tools with the Pilot's Guide and PC based simulator. Pilots should take full advantage of these training tools to enhance system familiarization.

4.1 Unit Power On

Databases ..... **REVIEW DATES**
Self-Test ..... **VERIFY OUTPUTS TO NAV INDICATORS**
Self-Test - TAWS Remote Annunciator:
- PULL UP ..... **ILLUMINATED**
- TERR ..... **ILLUMINATED**
- TERR N/A ..... **ILLUMINATED**
- TERR INHB ..... **ILLUMINATED**

Self-Test - GPS Remote Annunciator:
- VLOC ..... **ILLUMINATED**
- GPS ..... **ILLUMINATED**

4.2 Before Takeoff

System Messages and Annunciators ..... **CONSIDERED**

4.3 HSI and EHSI Operation

If an HSI is used to display navigation data from the GTN the pilot should rotate the course pointer as prompted on the GTN.

If an EHSI is used to display navigation data from the GTN the course pointer may autoslew to the correct course when using GPS navigation. When using VLOC navigation the course pointer will not autoslew and must be rotated to the correct course by the pilot. For detailed information about the functionality of the EHSI system, refer to the FAA approved Flight Manual or Flight Manual Supplement for that system.

CAUTION

The pilot must verify the active course and waypoint for each flight plan leg. The pilot must verify proper course selection each time the CDI source is changed from GPS to VLOC.

See Section 4.5 for RF leg capabilities related to EHSI.

4.4 Autopilot Operation

The GTN may be coupled to an optional autopilot, if installed in the aircraft, when operating as prescribed in the LIMITATIONS section of this manual.

Autopilots coupled to the GTN system in an analog (NAV) mode will follow GPS or VHF navigation guidance as they would with existing VOR receivers.

Autopilots that support GPSS or GPS Roll Steering in addition to the analog course guidance will lead course changes, fly arcing procedures, procedure turns, and holding patterns if coupled in a roll steering mode.

The GTN supports autopilot roll steering for heading legs when an approved heading source is interfaced to the GTN. This heading interface can also provide map orientation, traffic and StormScope heading data and wind calculations.

CAUTION

The GTN does not provide course deviation to the autopilot for heading legs. Some autopilots do not allow the use of roll steering when course deviation is not provided.

☐ This installation *has* a heading source. The GTN will provide roll steering on heading legs for the autopilot.

☐ This installation *does not have* a heading source. The crew cannot use the GTN roll steering to fly heading legs with the autopilot.

For autopilot operating instructions, refer to the FAA approved Flight Manual or Flight Manual Supplement for the autopilot.

4.5 Coupling the Autopilot during approaches

The GTN may be coupled to an optional autopilot, if installed in the aircraft, when operating as prescribed in the LIMITATIONS section of this manual.

CAUTION

When the CDI source is changed on the GTN, autopilot mode may change. Confirm autopilot mode selection after CDI source change on the GTN. Refer to the FAA approved Flight Manual or Flight Manual Supplement for the autopilot.

Analog only autopilots should use APR mode for coupling to LNAV approaches. Autopilots which support digital roll steering commands (GPSS) may utilize NAV mode and take advantage of the digital tracking during LNAV only approaches.

☐ This installation prompts the flight crew and requires the pilot to enable the approach outputs just prior to engaging the autopilot in APR mode.

To couple an approach:
Once established on the final approach course with the final approach fix as the active waypoint, the GTN will issue a flashing message indication.

Flashing Message Button ..... **PRESS**
"Enable APR Output" Button ..... **PRESS**

If coupled, Autopilot will revert to ROL mode at this time.

Autopilot ..... **ENGAGE APPROACH MODE**

☐ This installation supports coupling to the autopilot in approach mode once vertical guidance is available.

To couple an approach:
Once established on the final approach course with the final approach fix as the active waypoint, the GTN will enable vertical guidance.

Vertical Guidance ..... **CONFIRM AVAILABLE**
Autopilot ..... **ENGAGE APPROACH MODE**

☒ The installation *does not* support any vertical capture or vertical tracking.

The GTN allows for the utilization of IFR procedures that include RF (Radius to Fix) legs as part of RNP 1.0 capabilities.

☐ This installation is equipped to support coupled RF leg navigation up to RNP 1.0.

☐ This installation is equipped to support *un-coupled* RF leg navigation up to RNP 1.0.

☒ This installation *does not* support RF leg navigation.

4.6 Coupling the Autopilot during Search and Rescue Operations

Search and Rescue (SAR) patterns created in the GTN flight plan may include turns that cannot be accomplished with standard autopilot turn rates. Monitor autopilot performance relative to the desired path if coupled when using Search and Rescue patterns.

4.7 Database Conflict Resolution

When a conflict occurs between databases on different GTNs that are utilizing Database SYNC the pilot should resolve that conflict by pressing the "Resolve Conflict" button on the GTN that has the desired databases. This would be the GTN with the newest database on the SD card or Flight Stream 510. After initiating the conflict resolution, the pilot can view the SYNC status of the database on the other GTN by viewing the System -> Standby Database page. Once the database SYNC is complete, the receiving GTN must be restarted to install the new database and complete the conflict resolution process.

NOTE

The databases on the receiving LRU will be overwritten by the databases from the LRU from which the "Resolve Conflicts" action was initiated.

Section 5. PERFORMANCE

No change.

Section 6. WEIGHT AND BALANCE

See current weight and balance data.

Section 7. SYSTEM DESCRIPTIONS

7.1 Pilot's Guide

The Garmin GTN 6XX or GTN 7XX Pilot's Guide, part number and revision listed below, contain additional information regarding GTN system description, control and function. The Pilot's Guides *do not* need to be immediately available to the flight crew.

- GTN 6XX Pilot's Guide P/N 190-01004-03 Rev K or later
- GTN 7XX Pilot's Guide P/N 190-01007-03 Rev M or later

7.2 Leg Sequencing

The GTN supports all ARINC 424 leg types. Certain leg types require altitude input in order to sequence (course to altitude, for example). If a barometric corrected altitude source is not interfaced to the GTN, a popup will appear prompting the flight crew to manually sequence the leg once the altitude prescribed in the procedure is reached.

☐ This installation *has* a barometric corrected altitude source. The GTN will automatically sequence altitude legs.

☒ This installation *does not have* a barometric corrected altitude source. The flight crew will be prompted to manually sequence altitude legs.

7.3 Auto ILS CDI Capture

Auto ILS CDI Capture will not automatically switch from GPS to VLOC for LOC-BC or VOR approaches.

7.4 Activate GPS Missed Approach

☒ This installation *will* autoswitch from VLOC to GPS when the "Activate GPS Missed Approach" button is pressed.

☐ This installation *will not* autoswitch from VLOC to GPS when the "Activate GPS Missed Approach" button is pressed. The pilot must manually switch from VLOC to GPS if GPS guidance is desired after the missed approach point.

7.5 Terrain Proximity and TAWS

CAUTION

Not all obstacles and wires are contained in the Obstacle/HOT Line database. The system provides depiction (and alerts, if TAWS is installed) only for obstacles and wires contained in the database.

NOTE

The area of coverage may be modified as additional terrain data sources become available.

☒ This installation supports *Terrain Proximity*. *No aural or visual alerts* for terrain or obstacles are provided. Terrain Proximity *does not* satisfy the TAWS requirement of 91.223.

☐ This installation supports *TAWS B*. Aural and visual alerts *will be* provided. This installation *does* support the TAWS requirement of 91.223.

To avoid unwanted alerts, TAWS may be inhibited when landing at an airport that is not included in the airport database.

Terrain on the dedicated terrain page or main map overlay is depicted in the following manner:

- Terrain more than 1,000 feet below the aircraft is not depicted, or depicted as black.
- Terrain between 1,000 feet and 100 feet below the aircraft is depicted as amber.
- Terrain within 100 feet below the aircraft, or above the aircraft, is depicted as red.

Obstacles and wires on the dedicated terrain page or main map are depicted in the following manner:

- Obstacles and wires more than 2,000 feet below the aircraft are not depicted.
- Obstacles and wires between 2,000 feet and 1,000 feet below the aircraft are depicted as white.
- Obstacles and wires between 1,000 feet and 100 feet below the aircraft are depicted as amber.
- Obstacles and wires within 100 feet below the aircraft, or above the aircraft, are depicted as red.

Multiple obstacles may be depicted using a single obstacle icon and an asterisk to indicate obstacle grouping is occurring. The color of the asterisk indicates the relative altitude of the tallest obstacle in the group. The asterisk does not indicate any information about the relative altitude or number of obstacles not being displayed in the obstacle group.

The Garmin GTN 6XX or GTN 7XX Cockpit Reference Guide or Garmin GTN 6XX or GTN 7XX Pilot's Guide provides additional information regarding terrain and obstacle colors and grouped obstacle icons.

7.6 GMA/35c Audio Panel (Optional)

The GTN 725 and 750 can interface to a GMA 35/35c remotely mounted audio panel and marker beacon receiver. Controls for listening to various radios, activating the cabin speaker, clearance playback control, and marker beacon are accessed by pressing the "Audio Panel" button on the GTN display screen. Optional Bluetooth pairing functionality can be accessed from the associated System /Connext Setup page (GMA 35c only). Volume controls for the audio panel are accessed by pressing the "Intercom" button on the GTN display screen.

Aircraft alerting audio may be routed through the GMA 35/35c audio panel. There are no pilot controls for alert audio volumes. In the event of a loss of GMA35/35c function alert audio routed through the audio panel may not be heard.

7.7 Traffic System (Optional)

This system is configured for the following type of traffic system. The Garmin GTN 6XX or GTN 7XX Cockpit Reference Guide or Garmin GTN 6XX or GTN 7XX Pilot's Guide provides additional information regarding the functionality of the traffic device.

- ☒ No traffic system is interfaced to the GTN.
- ☐ A TAS/TCAS I traffic system is interfaced to the GTN.
- ☐ A TIS traffic system is interfaced to the GTN.
- ☐ A TCAD traffic system is interfaced to the GTN.
- ☐ A Garmin ADS-B traffic system is interfaced to the GTN.
- ☐ A Garmin ADS-B traffic system is interfaced to the GTN. The ADS-B traffic system is also interfaced to an on board traffic system.

7.8 StormScope® (Optional)

When optionally interfaced to a StormScope® weather detection system, the GTN may be used to display the StormScope® information. Weather information supplied by the StormScope® will be displayed on the StormScope® page of the GTN system. For detailed information about the capabilities and limitations of the StormScope® system, refer to the documentation provided with that system.

Heading Up mode:

If the GTN system is receiving valid heading information, the StormScope® page will operate in the heading up mode as indicated by the label "HDG UP" presented at the upper right corner of the display. In this mode, information provided by the StormScope® system is displayed relative to the nose of the aircraft and is automatically rotated to the correct relative position as the aircraft turns.

Heading Not Available mode:

If the GTN system is not receiving valid heading information, either because a compatible heading system is not installed, or the interfaced heading system has malfunctioned, the StormScope® page will continue to operate without a heading source and indicate "HDG N/A" in the upper right corner of the GTN display. In this mode, information provided by the StormScope® system is displayed relative to the nose of the aircraft but *is not* automatically rotated to the correct relative position as the aircraft turns. When operating in this mode, StormScope® strikes must be cleared after each turn the aircraft performs.

7.9 Power

- Power to the GTN is provided through a circuit breaker labeled NAV/GPS (1/2).
- Power to the optional GTN COM is provided through a circuit breaker labeled COM (1/2).
- Power to the optional GMA 35 is provided through a circuit breaker labeled AUDIO.
- Power to the optional Flight Stream 210 is provided through a circuit breaker labeled BT LINK.
- Power to the optional Flight Stream 510 is provided through the GTN MMC/SD card slot and protected via the GTN circuit breaker.

7.10 Databases and Flight Plan Waypoints/Procedures

Database versions (or cycles) and effective dates are displayed on the start-up database verification page immediately after power-on for those databases with an effective or expiration date. Databases with no effective or expiration date (e.g. - terrain database) are considered effective upon installation in the GTN. Database information can also be viewed on the System – System Status page.

The Obstacle Database has an area of coverage that includes the United States and Europe, and is updated as frequently as every 56 days. The HOT Line wire database only includes the continental United States and portions of Canada/Mexico.

Only the Obstacle/HOT Line wire database may be used in accordance with the limitation found in section 2.21.

If a flight plan contains a waypoint or procedure that does not correspond to a waypoint or procedure in the navigation database in use, the waypoint or procedure will become locked (depicted as "lockd") in the flight plan. Flight plans with locked waypoints may be placed in the active flight plan portion of the system but no active navigation will be provided. The locked waypoint/procedure must be resolved by removing or replacing it with the correct waypoint/procedures in the flight plan before the system will provide active navigation.

7.11 External Switches

External switches may be installed and interfaced to the GTN. These switches may be stand alone, or integrated with a TAWS or GPS annunciator. Table 3 lists the switches and function they perform:

Switch Label	Function
CDI	Toggles between GPS / VLOC sources. This switch may be part of an external annunciator panel.
COM CHAN DN	Toggles down through the preset com frequencies.
COM CHAN UP	Toggles up through the preset com frequencies.
COM RMT XFR	Transfers the COM active / standby frequencies.
NAV RMT XFR	Transfers the NAV active / standby frequencies.
OBS	Performs an OBS or SUSP function. This switch is part of an external annunciator panel and is placarded with the following: "Green OBS indicates OBS or SUSP mode – GTN annunciator bar indicates which is active. Push OBS button to change OBS or SUSP mode."
OBS/SUSP	Performs an OBS or SUSP function.
TERR INHB	Toggles the TAWS Inhibit function on/off. This switch is part of an external annunciator panel. The terrain display is still presented if TAWS is Inhibited.
PTC	Push-to-Command switch for Voice Command input to the GMA and the GTN.

Table 3 – External Switches

7.12 Airspace Depiction and Alerts

The GTN aides the flight crew in avoiding certain airspaces with Smart Airspace and airspace alerts. Smart Airspace de-emphasizes depicted airspace that is not near the aircraft's current altitude. Airspace Alerts provide a message indication to the flight crew when the aircraft's current ground track will intercept an airspace type that has been selected for alerting.

NOTE

Smart Airspace and Airspace Alerts are separate features. Turning on/off Smart Airspace does not affect Airspace Alerts, and vice versa.

7.13 Garmin ADS-B Traffic System Interface (Optional)

A Garmin ADS-B traffic system may be interfaced to the GTN. The *nose* of the ownship symbol on both the GTN main map page and dedicated traffic page serves as the actual location of your aircraft. The *center* of the traffic target icon serves as the reported location for the target aircraft. Motion vectors for traffic may be displayed in either absolute or relative motion. The location of the traffic targets relative to the ownship are the same, regardless of the selected motion vector.

Absolute motion vectors are colored either cyan or white, depending on unit configuration. Absolute motion vectors depict the reported track of the traffic target referenced to the ground. An absolute motion vector pointed towards your ownship symbol *does not* necessarily mean the traffic target is getting closer to your aircraft.

Relative motion vectors are always colored green and depict the motion of the traffic target relative to your ownship symbol. The direction the traffic target is pointed may vary greatly from the motion vector and a target may be getting closer to your aircraft independent of the direction the target is pointed. A green relative motion vector pointed towards your ownship indicates that the traffic target *is* converging on your aircraft.

If more than one target is occupying the same area of the screen, the GTN will combine the two or more traffic targets into one traffic group. The presence of an asterisk to the left of a target indicates that traffic has been grouped. The highest priority traffic target in the group is displayed to the pilot. When applied to airborne targets the asterisk will be displayed in white or cyan depending on the traffic depiction color used in the installation. The asterisk will be brown for grouped ground targets. The asterisk will not turn amber, even if an alerted target is included in the group.

An alerted target may be placed in the same group as non-alerted targets. In this case, the alerted target will be displayed. Two alerted targets will not be placed in the same group. All alerted targets will be displayed on the screen.

Traffic targets displayed on the dedicated traffic page may be selected in order to obtain additional information about a traffic target or to view all targets in a grouped target. When a grouped target is selected, the "Next" button on the dedicated traffic page will cycle through all targets located in close proximity to where the screen has been touched.

7.14 GWX 70 Weather Radar (Optional)

The GWX 70 Weather Radar uses Doppler technology to provide advanced features to the flight crew such as turbulence detection and ground clutter suppression. Turbulence detection can detect turbulence up to 40nm from the aircraft and will be displayed at radar ranges of 160nm or less.

NOTE

Turbulence detection does not detect all turbulence especially that which is occurring in clear air. The display of turbulence indicates the possibility of severe or greater turbulence, as defined in the Aeronautical Information Manual.

7.15 Charts (Optional)

The GTN 750/725 can display both procedure charts and weather data on the main map page at the same time. When datalink NEXRAD or Precipitation is overlaid on the main map page, the weather data is displayed *below* an overlaid procedure chart. When airborne weather radar is overlaid on the main map page, the radar data is displayed *above* an overlaid procedure chart.

7.16 Transponder Control (Optional)

The GTN can be interfaced to a Garmin transponder for control and display of squawk code, mode, and additional transponder functions. The activation of the "Enable ES" button on the transponder page does not indicate the aircraft is in full compliance with an ADS-B Out solution in accordance with TSO-C166b (1090ES). Consult your transponder documentation for additional information.

7.17 Telephone Audio (Optional)

Telephone audio distribution to the crew defaults to OFF on each power cycle of the GTN. Prior to utilizing the telephone function the crew must distribute telephone audio to the desired recipients. If the crew is utilizing the telephone function it is required that the telephone audio be turned off upon completing telephone usage.

7.18 Depiction of Obstacles and Wires

7.18.1 Dedicated Terrain Page

The dedicated Terrain page will always depict point obstacles at zoom scales of 10 nm or less and depict wire obstacles at zoom scales of 5 nm or less. The obstacle or wire overlay icon (see Figure 3) will be shown near the bottom of the display when the obstacle or wire depiction is active based on the zoom scale.

NOTE

Only obstacles and wires within 2,000 feet vertically of the aircraft will be drawn on the Terrain page. It is therefore possible to have an obstacle or wire overlay icon displayed with no obstacles or wires being depicted on the display.

Figure 3 – Obstacle Overlay Icon (Left), Wire Overlay Icon (Right)

7.18.2 Map Page

The Map page may be configured to depict point obstacles and wire obstacles at various zoom scales by the pilot by using the Map page menu. The obstacle or wire overlay icon (see Figure 4) will be shown near the bottom of the display when the obstacle or wire overlay is active based on the current zoom scale and setting selected by the pilot.

The settings chosen by the pilot on the Map page menu (including obstacle and wire display ranges) are saved over a power cycle.

NOTE

Only obstacles and wires within 2,000 feet vertically of the aircraft will be drawn on the Map page. It is therefore possible to have an obstacle or wire overlay icon displayed with no obstacles or wires being depicted on the display.

NOTE

The Map page may be configured by the pilot to not show any obstacles or wires at any zoom scale.

Figure 4 – Obstacle Overlay Icon (Left), Wire Overlay Icon (Right)

7.19 Flight Stream 210/510 (Optional)

The Flight Stream product line uses a wireless transceiver to provide data to and from a GTN to personal electronic devices (PEDs).

The Flight Stream 210 is a remotely mounted unit that provides the capability to interface Portable Electronic Devices (PEDs) to the GTN via Bluetooth. The Flight Stream 510 is mounted in the GTN SD card slot and includes a Bluetooth and Wi-Fi transceiver.

Data such as traffic, flight plan, datalink weather, entertainment audio information, and attitude information is sent from the Flight Stream to the PED. The PED is capable of sending flight plans and databases (510 only) to the Flight Stream which will then be available on the GTN. Limitations regarding database operations are found in Section 2.23.

Garmin provides a list of tested and compatible devices that can be used with the Flight Stream. Connection to the Flight Stream may be possible with devices other than those on the supported device list, but Bluetooth® and/or Wi-Fi stability and wireless data integrity cannot be guaranteed.

For details about the Garmin supported devices and apps for use with the Flight Stream product line, please visit: http://garmin.com/connext/supported_devices

7.20 Map Page

7.20.1 Configuration

The moving map and weather pages are capable of displaying a large quantity and variety of data. Map data is layered to ensure that data which is typically more critical is drawn above less critical data, however at some zoom scales and configurations the map may be cluttered with large amounts of data. Controls are provided on the Map and Weather pages for the pilot to select which data displayed, the declutter level, and the zoom scales at which data is added to or removed from the display. It is the responsibility of the pilot to select settings for the map page that will provide the display of data most appropriate to the operation being conducted.

7.20.2 Flight Plan Depiction

The map page depicts the current active flight plan. When an off-route Direct To is active the flight plan will no longer be depicted on the map.

7.20.3 Fuel Range Ring

The distance between the segmented green reserve ring and the yellow zero fuel ring is 45 minutes at the current aircraft groundspeed by default. The pilot may change the fuel reserve time value on the map setup menu. Changes to the fuel reserve time are persisted over GTN power cycles.

Visibility of the fuel range ring may be affected by the underlying map data selectable by the pilot. The pilot may make changes to the topographic or terrain data in order or more clearly observe the fuel range ring at any time.

Fuel range data is derived from the interfaced fuel totalizer data. Data entered in the Fuel Planning pages will not update the fuel range ring.

7.21 User Defined Waypoints

When a User Defined Waypoint is created a default name will automatically be provided and the pilot is given the option to provide a different name for the waypoint. Pages which have the autofill function will prevent some waypoint names from being used. If it is desired to name the waypoint with a subset of the name of an existing waypoint in the database then this must be accomplished on the Waypoint Info / User Waypoints page.

Waypoints which are created when a Search and Rescue pattern is created are not considered User Waypoints and therefore functions associated with User Waypoints are not provided for these waypoints.

7.22 Times and Distances

Time and Distance data to the next waypoint is always calculated from the present position to that waypoint and does not account for the path which may be flown (such as intercepting a course) to reach the waypoint.

When navigating using GPS guidance most legs are TO type legs where distance to the next waypoint decreases along the route. However, some procedures include FROM type legs. When navigating on a leg that is a FROM leg indications that it is a FROM leg include the TO/FROM flag indicating FROM and distances increasing in distance fields.

7.23 GTN-GTN Crossfill

Certain data will sync between GTNs when installed in a dual GTN configuration. The following data will crossfill between the two GTNs with CROSSFILL ON or OFF:

- User Waypoints
- FPL Catalog
- Traffic Alerts
- Missed Approach Popups
- Altitude Leg Popups
- Heading
- Date/Time Conventions
- CDI Scale

The following unit changes will crossfill:

- Temperature
- NAV Angle
- Fuel

The following items are crossfilled only when the GTNs are set to CROSSFILL ON:

- User Holds
- Approaches
- Flight Plan Changes
- Direct-To
- Selected OBS Course Changes

7.24 Direct-To Operations

When conducting Direct-To operations the Flight Plan tab provides a list of waypoints in the flight plan for which Direct-To is available. Some entries in the flight plan such as Holds and Course Reversals are not eligible for Direct-To and the pilot must instead select the associated waypoint if Direct-To operation is desired.

7.25 Automatic Speech Recognition (ASR)

ASR allows the pilot to interact with the GMA and GTN via voice commands. Commands are constructed around the "Verb – Noun – (Suffix)" syntax for most ASR commands.

- **"SHOW"** Commands – Used to show pages or data fields on the GTN
- **"SAY"** Commands – Used to instruct the ASR engine to say certain phrases related to the flight
- **"TUNE"** Commands – Used to tune certain frequencies into the standby position of the ASR GTN (usually GTN #1)

The "Page" suffix is used in conjunction with the "Show" phrase to command pages to be displayed on the GTN. (e.g.- "Show Main Map Page")

Audio Panel commands are available to switch audio sources.

- **"SELECT"** to choose which radio the MIC will be selected
- **"TOGGLE"** to toggle the monitor of a specific NAV/COM radio
- **"DISTRIBUTE"** to change the source of audio for the respective seat positions
- **"MUTE"** to mute audio inputs on the audio panel for the respective seat positions

Supplemental commands that allow map zooming, and page navigation are also available.

- **"BACK"**
- **"CANCEL"**
- **"ZOOM IN"**
- **"ZOOM OUT"**

Each command is initiated via the Push-to-Command (PTC) switch. Aural tones will indicate to the pilot the status of the command. A positive tone (low to high) will indicate the system executed a command. A negative tone (high to low) will indicate the system did not understand the command or could not execute due to system state or configuration. "SAY" commands do not provide aural tones as feedback.

The pilot must maintain vigilance regarding ASR command information. Due to the nature of voice recognition, there are times when ASR will interpret a command differently than the pilot intended. The pilot should always cross check the ASR response to the information contained within the GTN as appropriate to ensure in-flight information is accurately understood. If a conflict

exists between information gathered via ASR and that available in the GTN system, the pilot should defer to the GTN system information.

Prior to using ASR, the pilot must complete the ASR Qualification Procedure from the GTN Cockpit Reference Guide.

The Command History Page details the commands received by ASR for that power cycle. A full list of commands and a tips for using ASR can be found in the *GTN 6XX/7XX Telligence Voice Command Guide,* 190-01007-50.

When using ASR for "TUNE" commands, it is recommended that the pilot enable Reverse Frequency Lookup (RFL) on the associated GTN.

7.26 European Visual Reporting Points

If the GTN is interfaced with a G500/600 PFD/MFD, and a flight plan in the GTN contains a VRP, the G500/600 must have a database that contains the VRP in order to appropriately display the VRP on the MFD map. If the database on the PFD/MFD does not contain the VRP, the VRP will display on the MFD map as an intersection.

Garmin International, Inc.
1200 E. 151st Street
Olathe, Kansas 66062 U.S.A.

EASA APPROVED

AIRPLANE FLIGHT MANUAL SUPPLEMENT
or
SUPPLEMENTAL AIRPLANE FLIGHT MANUAL
for the
Garmin GTN 625, 635, 650, 725, or 750 GPS/SBAS Navigation System
as installed in

Robin DR 400/140 B
Make and Model Airplane

Registration Number: HB-KCJ Serial Number: 1916

This document serves as an Airplane Flight Manual Supplement or as a Supplemental Airplane Flight Manual when the aircraft is equipped in accordance with Supplemental Type Certificate 10037574 for the installation and operation of the Garmin GTN 625, 635, 650, 725, or 750 GPS/SBAS Navigation System. This document must be carried in the airplane at all times.

The information contained herein supplements or supersedes the information made available to the operator by the aircraft manufacturer in the form of clearly stated placards or markings, or in the form of an approved Airplane Flight Manual, only in those areas listed herein. For limitations, procedures and performance information not contained in this document, consult the basic placards or markings, or the basic approved Airplane Flight Manual.

Signed By:

Michael Warren
ODA STC Unit Administrator
Garmin International Inc.
ODA-240087-CE

Date: 11-APR-2016

EASA STC No.: 10037574 Rev. 3

LOG OF REVISIONS				
	Page			
Revision Number	Date	Number	Description	EASA Approval
1	07-08-13	All	Complete Supplement	Jannes Neumann EASA Approved Date: *07-Aug-2013*
2	09-03-16	5	Added Flight Stream Limitation	See Page 1

Table of Contents

SECTION	PAGE
Section 1. GENERAL	**4**
Section 2. LIMITATIONS	**5**
Section 3. EMERGENCY PROCEDURES	**6**
Section 4. NORMAL PROCEDURES	**6**
Section 5. PERFORMANCE	**6**
Section 6. WEIGHT AND BALANCE	**6**
Section 7. SYSTEM DESCRIPTIONS	**6**

Section 1. GENERAL

1.1 Garmin GTN Navigators

The information in this supplement is EASA-approved material and must be attached to the FAA Approved STC Airplane Flight Manual Supplement, P/N 190-01007-A2 or 190-01007-A5, when the airplane has been modified by installation of the Garmin GTN Navigation System in accordance with STC 10037574.

This EASA approved Airplane Flight Manual Supplement is required in addition to the FAA approved Airplane Flight Manual Supplement, P/N 190-01007-A2 or 190-01007-A5.

All references to TSO-C146c in 190-01007-A2 or 190-01007-A5 are replaced by ETSO-C146.

Electronic Flight Bag section information is pertinent to FAA certified aircraft only.

Additional References:

Temporary Guidance Leaflet 10, Rev 1: Airworthiness and Operational Approval for Precision RNAV Operations in Designated European Airspace

Acceptable Means of Compliance 20-4, Airworthiness Approval and Operational Criteria for the Use of Navigation Systems in European Airspace Designated for the Basic RNAV Operations

Acceptable Means of Compliance 20-27, Airworthiness Approval and Operational Criteria for RNP APPROACH (RNP APCH) Operations Including APV BARO-VNAV Operations

Acceptable Means of Compliance 20-28, Airworthiness Approval and Operational Criteria for RNAV GNSS Approach Operation to LPV Minima using SBAS

Section 2. LIMITATIONS

2.1 Display of Distance to Waypoint (for European registered aircraft only)

During installation, the GTN was configured to display distance to current waypoint on the Map Page (GTN 7XX) or Default Navigation Page (GTN 6XX). The display location of distance to current waypoint must not be altered or removed from these pages.

2.2 Phone/SMS Suppress Visuals Setting (for European registered aircraft only)

During installation, the GTN was configured to suppress visual alerts during approach, missed approach, and terminal operations for the GSR 56 Iridium Phone and SMS features. The Suppress Visuals setting on the Service-Phone page must not be changed from "On During APR/MAPR/TERM".

2.3 Flight Stream with Portable Electronic Devices

The Flight Stream interface and data provided to a portable electronic device is not approved to replace any required or installed aircraft display equipment, including navigation or traffic/weather display equipment. The data presented on the PED may not have the required integrity to be used as the sole source of information to base tactical or strategic decision making.

Use of the Flight Stream for flight plan importing during critical phases of flight by the pilot flying is prohibited.

Section 3. EMERGENCY PROCEDURES

No Change.

Section 4. NORMAL PROCEDURES

No Change.

Section 5. PERFORMANCE

No change.

Section 6. WEIGHT AND BALANCE

No Change.

Section 7. SYSTEM DESCRIPTIONS

No Change.

Aircraft FLIGHT MANUAL SUPPLEMENT
No.7261-013 for
Aspen EFD 1000 VFR - Electronic Flight Display

A/C Make :	**Avions Pierre Robin**
A/C Model :	**DR 400/140B**
A/C S/N :	**1916**
Registration:	**HB-KCJ**

This document serves as an Airplane Flight Manual Supplement or as a Supplemental Airplane Flight Manual for the installation and operation of the Aspen EFD 1000 EFD System. This document must be carried in the airplane at all times when the Aspen EFD 1000 VFR system is installed in accordance to the appropriate Aspen Installation Manual P/N 900-00003-001, Rev. BH and CS-STAN SC-SC052a and CS-SC401a.

The information contained herein supplements or supersedes the information made available to the operator by the aircraft manufacturer in the form of clearly stated placards or markings, or in the form of an approved Airplane Flight Manual, only in those areas listed herein. For limitations, procedures and performance information not contained in this document, consult the basic placards or markings, or the basic approved Airplane Flight Manual

This Flight Manual Supplement is EASA approved under:
EASA CS-STAN

Log of Revisions:

Revision -Nr.	Pages	Date	Remarks/Change
Initial Issue	1 –3	03.03.2017	Original Issue

TABLE OF CONTENT

SECTION I : GENERAL 3
SECTION II : LIMITATIONS 3
SECTION III : EMERGENCY PROCEDURES 3
SECTION IV: NORMAL PROCEDURES 3
SECTION V : PERFORMANCE 3
SECTION VI : WEIGHT AND BALANCE 3
SECTION VII : SYSTEM DESCRIPTIONS 3

SECTION I : GENERAL

The information in this supplement is EASA approved material and must be attached to the FAA approved AFMS Aspen P/N 900-00008-001 Rev. AD when the airplane has been modified by installation of a Aspen Electronic Flight Display System in accordance with the Aspen Installation Manual P/N 900-00008-001, current revision

This additional Supplement is required in additional to the FAA approved AFMS Aspen P/N 900-00008-001 Rev. AD.

The Information's contained in the above referenced supplements for the Aspen EFD 1000 VFR Installation are also applicable for this installation

SECTION II : LIMITATIONS

Limitations defined in the FAA approved AFMS Aspen P/N 900-00008-001 Rev. AD are also applicable for this VFR limited Installation

SECTION III : EMERGENCY PROCEDURES

No Change.

SECTION IV: NORMAL PROCEDURES

No change.

SECTION V : PERFORMANCE

No change.

SECTION VI : WEIGHT AND BALANCE

See current weight and balance data in the AFM.

SECTION VII : SYSTEM DESCRIPTIONS

No change.

ASPEN AVIONICS

Aspen Avionics, Inc.
5001 Indian School NE
Albuquerque, NM 87110 USA

CONTROL # 143/1989/16

FAA APPROVED
AIRPLANE FLIGHT MANUAL SUPPLEMENT
or
SUPPLEMENTAL AIRPLANE FLIGHT MANUAL
for the
ASPEN AVIONICS EVOLUTION FLIGHT DISPLAY SYSTEM
EFD1000 PRIMARY FLIGHT DISPLAY
Optionally with
EFD1000 AND/OR EFD500 MULTI-FUNCTION DISPLAYS
or
Aspen Evolution Backup Display

The information contained in this Supplement must be attached to the FAA Approved Airplane Flight Manual or placed with the Pilot's Operating Handbook or other operating information when the Aspen EFD1000 PFD and optionally the Aspen EFD1000 MFD and/or EFD500 MFD are installed in accordance with AML STC SA10822SC. This document must be carried in the aircraft at all times.

The information in this Supplement supplements or supersedes the information in the FAA Approved Airplane Flight Manual or other operating information only as set forth herein.

For limitations, procedures, and performance data not contained in this Supplement, consult the Airplane Flight Manual or other operating information.

Airplane Make:	Robin
Airplane Model:	DR400/140B
Airplane Registration Number:	HB-KCJ
Airplane Serial Number:	1916

FAA APPROVED By: John Hardie / for
Jim Grigg
Manager, Aircraft Certification Office
Fort Worth, Texas

APPROVED: 12/8/2016

© Copyright 2016 Aspen Avionics Inc.

This Page Intentionally Left Blank

© Copyright 2016 Aspen Avionics Inc.

DOCUMENT REVISIONS FAA APPROVED PAGES

Document Revision	FAA Approved Pages Revised	Description of Change	FAA Approval Date	ECO
Earlier revisions are on file				
W	All	Complete Rewrite, added ADS-B integration	2/20/2015	4258
Y	All	Updated based on FAA comments. Added AOA Functionality.	None	4502
Z	All	Addressed FAA Comments.	17JUL2015	4525
AA	All	Removed references to Pilot Guides from the Limitations Section and added references to the Pilot Guides in the Systems Description section. Updated Copyright to 2016. Added the EBD Model. Added GDL 88 integration information.	None	4712
AB	All	Added caution into Sections 7.9 & 7.11.	31 March 2016	4732
AC	All	Added S-TEC 55X integration to the Installed Equipment List Table and clarified some entries to correspond with the Installation Manual. Added S-TEC 55X integration and new FIS-B annunciations to the Warnings, Cautions and Advisories table and clarified some entries to correspond with the Installation Manual. Updated Pilot Guide revisions, added reference to the VFR PFD Pilot's Guide.	9/26/16	4821
AD	All	Added GTX 345 integration information	12/8/2016 (AFMS/SAFM DATED 18 November 2016)	4964

Prepared By:	Penny Heinz	*Reviewed By:*	David Bibby	**See ECO Record For Release Authorization**

© Copyright 2016 Aspen Avionics Inc.

TABLE OF CONTENTS

1 General 6
1.1 System Overview 6
1.2 Installed Equipment List 6
1.3 List of Acronyms and Abbreviations 9

2 Limitations 12
2.1 Kinds of Operation for the PFD PRO, PFD PRO C3, PFD PILOT or PFD VFR 12
2.2 EFD1000 PFD System Limitations 12
2.3 EFD1000 and EFD500 MFD System Limitations 14
2.4 Placards 15

3 Emergency/Abnormal Procedures 17
3.1 Emergency Procedures 17
3.2 Abnormal Procedures 17
3.3 Warnings, Cautions and Advisories 18

4 Normal Procedures 38
4.1 Exterior Inspection 38
4.2 Before Take-Off Checks 38
4.3 Avionik Straubing APS4A Altitude Preselector 39
4.4 S-TEC 55X Altitude Preselect and Vertical Speed Control 39
4.5 ADS-B OUT Control 40
4.6 Before Approach Checks 40
4.7 Shutdown Checks 40
4.8 Turning the AOA System On, Off or Auto on the PFD 40

5 Performance 41

6 Weight and Balance 42

7 Systems Description 43
7.1 Evolution Flight Display 43
7.2 Databases 44
7.3 Remote Sensor Module (RSM) 44
7.4 Traffic Display 44
7.5 ADS-B 45
7.6 Weather Interface 45
7.7 Stormscope 45
7.8 Terminal Procedure Charts 45
7.9 NAV and Terrain Maps 45
7.10 EA100 Autopilot AHRS 46
7.11 Synthetic Vision and Terrain Warning System 46
7.12 Connected Gateway 46
7.13 Radar Altitude 46
7.14 ADF Interface 46
7.15 VHF Interface 46
7.16 GPS Interface 47
7.17 Avionik Straubing APS4A Altitude Preselector 47
7.18 S-TEC 55X Vertical Speed Control/Altitude Preselect 47
7.19 Autopilot Source Select 47
7.20 AOA System 47

© Copyright 2016 Aspen Avionics Inc.

TABLE OF TABLES

TABLE 1 - INSTALLED EQUIPMENT LIST 6
TABLE 2 - BACKUP INSTRUMENTS CONFIGURATION FOR THE PFD PRO, PFD PRO C3, PFD PILOT OR PFD VFR. 8
TABLE 3 - MINIMUM EQUIPMENT REQUIRED FOR A FLIGHT OPERATION 12
TABLE 4 - WARNING, CAUTION AND ADVISORY ANNUNCIATIONS 19
TABLE 5 - DATABASES 44
TABLE 6 - AOA DISPLAY MODES 48
TABLE 7 - AOA "ON "MODE 48
TABLE 8 - AOA "AUTO" MODE 48
TABLE 9 - POINTER DEFINITION 49
TABLE 10 - COLOR BAND DEFINITION 49

© Copyright 2016 Aspen Avionics Inc.

1 General

1.1 System Overview

The Evolution Flight Display System consists of one or more integrated Electronic Flight Display (EFD1000 or EFD500) systems. The EFD1000 system can be configured as a primary flight display (PFD) or as a multi-function display (MFD) and the EFD500 system can only be configured as a MFD.

When the EFD1000 is configured as a PFD, the EFD1000 provides display of attitude, airspeed, altitude, vertical speed, turn rate, slip/skid and direction of flight. Depending on the optional equipment connected to the EFD1000 and the PFD version, the system can also provide display of lateral and vertical navigation deviations, flight director commands, synthetic vision, weather information, traffic information, and several other features. The following PFD versions are supported on the EFD1000: PFD PRO, PFD PRO C3, PFD VFR, PFD PILOT, PFD EBD Advanced and PFD EBD Basic.

When the EFD1000 is configured as an MFD, the EFD1000 provides navigation and weather information, terrain and obstacle data, and traffic information that can be displayed on a moving map. The EFD1000 MFD also provides PFD reversion capability, synthetic vision, terminal procedure charts, a secondary display of attitude, airspeed, and altitude, and several other features depending on the optional equipment that is connected to the EFD1000.

The EFD500 MFD provides all of the features of the EFD1000 MFD except for PFD reversion capability and a secondary display of attitude, airspeed and altitude.

1.2 Installed Equipment List

Table 1 shows the list of Aspen Equipment installed in this aircraft. Use the table to determine the parts of the AFMS that are applicable to this aircraft.

Table 1 - Installed Equipment List

Installed Equipment	EFD1000 PFD PRO -or- EFD1000 PFD EBD Advanced	EFD1000 PFD PRO C3	EFD1000 PFD PILOT -or- EFD1000 PFD EBD Basic	EFD1000 PFD VFR	EFD1000 MFD	EFD500 MFD	Remarks
N/A = Not Available							
Evolution Flight Display System with Internal Battery Software Version (MAP \ IOP)				✓			
Evolution Flight Display System with Emergency Backup Battery (EBB) Software Version (MAP \ IOP)		N/A		N/A		N/A	
RSM with GPS				✓		N/A	
RSM without GPS				n/a		N/A	
Angle of Attack (AOA) System		N/A		n/a			

© Copyright 2016 Aspen Avionics Inc.

Installed Equipment	EFD1000 PFD PRO -or- EFD1000 PFD EBD Advanced	EFD1000 PFD PRO C3	EFD1000 PFD PILOT -or- EFD1000 PFD EBD Basic	EFD1000 PFD VFR	EFD1000 MFD	EFD500 MFD	Remarks
ADS-B OUT integrated with the Aspen PFD		N/A	N/A	n/a	N/A	N/A	ADS-B OUT Make and Model:
ADS-B IN Traffic Interface without TCAS 1 or TAS incorporated		N/A	N/A	n/a			ADS-B IN Traffic Interface Make and Model:
Conflict Situational Awareness- traffic alerting (CSA)		N/A	N/A	n/a			GDL 88 or GTX 345 integration only
ADS-B IN Traffic Interface with TCAS I incorporated		N/A	N/A	n/a			ADS-B IN Traffic Interface Make and Model:
ADS-B IN Traffic Interface with TAS incorporated		N/A	N/A	n/a			ADS-B IN Traffic Interface Make and Model:
TCAS I Traffic Interface			N/A	n/a			
TAS Traffic Interface			N/A	n/a			
TIS-A Traffic Interface			N/A	n/a			
XM Datalink Weather Interface (EWR50)		N/A	N/A	n/a			
ADS-B IN (FIS-B) Weather Interface		N/A	N/A	n/a			ADS-B IN (FIS-B) Weather Interface Make and Model:
L3 Stormscope® Interface (STRK)		N/A	N/A	n/a			
Terminal Procedure Charts	N/A	N/A	N/A	N/A			Requires a database.
MFD NAV Map	N/A	N/A	N/A	N/A	√	√	Requires a database.
EA100 Autopilot AHRS Software Version			N/A	n/a		N/A	
Evolution Synthetic Vision and the Aspen Terrain Warning System (TWS)		N/A	N/A	N/A			Requires a database.
10-Hour Evolution Synthetic Vision Demo and the Aspen Terrain Warning System (TWS)		N/A	N/A	N/A	N/A	N/A	Only enabled for a trial period. Acknowledgment page shows the status of the trial period. Requires a database.
Audible alerts for the Aspen Terrain Warning System (TWS)			N/A	N/A	N/A	N/A	Audible alerts are only available if TAWS is not installed.
Aspen Connected Gateway (CG100) Software Version	N/A	N/A	N/A	N/A			Not authorized for EASA-registered aircraft.

© Copyright 2016 Aspen Avionics Inc.

Installed Equipment	EFD1000 PFD PRO -or- EFD1000 PFD EBD Advanced	EFD1000 PFD PRO C3	EFD1000 PFD PILOT -or- EFD1000 PFD EBD Basic	EFD1000 PFD VFR	EFD1000 MFD	EFD500 MFD	Remarks
Radar Altitude Numeric Display Input			N/A	N/A		N/A	
Radar Altitude Decision Height Input			N/A	N/A		N/A	
ADF1 Interface			N/A	N/A		N/A	
ADF2 Interface			N/A	N/A		N/A	
VHF1 (VLOC1) Navigation Radio Interface			N/A	√		N/A	
VHF2 (VLOC2) Navigation Radio Interface			N/A	n/a		N/A	
GPS1 Interface				√			GPS Make and Model:
GPS2 Interface			N/A	n/a			GPS Make and Model:
Avionik Straubing APS4A Altitude Pre-selector Function			N/A	n/a	N/A	N/A	Not available on the EFD1000 PFD EBD Advanced
A/P Source Select			N/A	N/A		N/A	Not available on the EFD1000 PFD EBD Advanced
Autopilot Mode Annunciations Altitude Preselect and Vertical Speed Control for the S-TEC 55X autopilot with Flight Director		N/A	N/A	N/A		N/A	Available on the EFD1000 MFD in reversion with A/P Source Select installed. Not available on the EFD1000 PFD EBD Advanced
Autopilot Mode Annunciations Altitude Preselect and Vertical Speed Control for the S-TEC 55X autopilot with no Flight Director		N/A	N/A	N/A		N/A	Available on the EFD1000 MFD in reversion with A/P Source Select installed. Not available on the EFD1000 PFD EBD Advanced

Table 2 is used to identify the backup equipment applicable to this aircraft's installation. This table is completed during installation by the installation facility.

Table 2 - Backup Instruments Configuration for the PFD PRO, PFD PRO C3, PFD PILOT or PFD VFR

Model of backup Attitude Indicator in this aircraft:	n/a
Type of Standby Airspeed Indicator in this aircraft: (EFD1000 MFD with EBB or Mechanical Airspeed indicator) *	original analog
Type of Standby Altimeter in this aircraft: (EFD1000 MFD with EBB or Mechanical Altimeter) *	original analog

*An EFD1000 MFD connected to an EBB is required unless a standby mechanical Airspeed indicator and standby Altimeter are installed.

© Copyright 2016 Aspen Avionics Inc.

1.3 List of Acronyms and Abbreviations

A ..... Alert
A/P ..... Autopilot
ACU ..... Analog Converter Unit
ADAHRS ..... Air Data Attitude Heading Reference System
ADF ..... Automatic Direction Finder
ADS-B ..... Automatic Dependent Surveillance- Broadcast
AHRS ..... Attitude Heading Reference System
AFM ..... Airplane Flight Manual
AFMS ..... Airplane Flight Manual Supplement
AGL ..... Above Ground Level
AIR ..... AIRMET
AIRMET ..... Airmen's Meteorological Information
AML ..... Approved Model List
AMMD ..... Aerodrome Moving Map Display
ANT ..... Antenna
AOA ..... Angle of Attack
APPR ..... Approach
ASPEN GTWY ..... See GTWY
BARO ..... Barometric Pressure Setting
BAT ..... Battery
C ..... Caution
C3 ..... Class III
CG100 ..... Connected Gateway remote LRU
CHG ..... Change
CM ..... Configuration Module
CNUS ..... Continental United States
Config ..... Configuration
CSA ..... Conflict Situational Awareness -traffic alerting
CTL ..... Control
CWS ..... (autopilot) Control Wheel Steering
DH ..... Decision Height
DISC ..... Disconnect
EA ..... Evolution Adapter
EASA ..... European Aviation Safety Agency
EBB ..... Emergency Backup Battery
EBD ..... Evolution Backup Display
ECO ..... Engineering Change Order
EFB ..... Electronic Flight Bag
EFD ..... Evolution Flight Display
EFIS ..... Electronic Flight Instrument System
EMER ..... Emergency
EOC ..... Executable Object Code
ESV ..... Evolution Synthetic Vision
EWR ..... Evolution Weather Receiver
EXT PWR ..... External Power
FAA ..... Federal Aviation Administration
FIS-B ..... Flight Information Service- Broadcast
FPL ..... Flight Plan
FPM ..... Flight Path Marker
Ft. ..... Fort
FOV ..... Field of View
GEO-REFERENCED ..... Chart scaling that permits ownship depiction
GTWY ..... Aspen Connected Gateway, including the CG100
GPS ..... Global Positioning System
GPSS ..... GPS Steering

© Copyright 2016 Aspen Avionics Inc.

HDG ..... Heading
HORZ ..... Horizontal
HSI ..... Horizontal Situation Indicator
IAS ..... Indicated Airspeed
ID ..... Identification
IFR ..... Instrument Flight Rules
IMC ..... Instrument Meteorological Conditions
Inc. ..... Incorporated
INIT ..... Initialization
INTEG ..... Integrity
IOP ..... Input-Output Processor
JSUM ..... Jeppesen Services Update Manager
KIAS ..... Knots Indicated Airspeed
KOEL ..... Kinds of Operations Equipment List
L3 ..... L3 Communications
LRU ..... Line replaceable Unit
LTNG ..... Lightning
LOC ..... Localizer
MAP ..... Main Application Processor
MEMS ..... Micro Electromechanical Systems
MFD ..... Multi-Function Display
MIC ..... Microphone
MIN ..... Minimums
MSG ..... Message
N/A ..... Not Applicable
NACO ..... National Aeronautical Charting Office
NAV ..... Navigation
NAVAIDS ..... Navigational Aids
NE ..... Northeast
NEXRAD ..... Next Generation Radar
NM ..... New Mexico
NORM ..... Normal
NOTAM ..... Notices To Airmen
NXRD ..... NEXRAD
OAT ..... Outside Air Temperature
PFD ..... Primary Flight Display
POM ..... Pitot Obstruction Monitor
POS ..... Position
PRESEL ..... Altitude Preselect
RA ..... Radar Altitude
REV ..... Reversion
RGNL ..... Regional
RMVD ..... Removed
RSM ..... Remote Sensor Module
SAI ..... Secondary Attitude Indicator
SDHC ..... Secure Digital, High-Capacity
SHSI ..... Secondary Horizontal Situation Indicator
SID ..... Standard Instrument Departure
SIG ..... SIGMET
SIGMET ..... Significant Meteorological Information
STAR ..... Standard Terminal Arrival Route
STC ..... Supplemental Type Certificate
STRK ..... Strikes (Stormscope)
SV ..... Synthetic Vision
TAS ..... True Airspeed
TAS ..... Traffic Advisory System
TCAS ..... Traffic and Collision Avoidance System

© Copyright 2016 Aspen Avionics Inc.

TERR	Terrain
TFR	Temporary Flight Restriction
TIS	Traffic Information System
TWS	Terrain Warning System
TFC	Traffic
TFCA	Traffic altitude filter "Above"
TFCB	Traffic altitude filter "Below"
TFCN	Traffic altitude filter "Normal"
TFCU	Traffic altitude filter "Unrestricted"
TRFC	Traffic
UAT	Universal Access Transceiver
UNAV	Unavailable
V	Volts
VECT	Vector
VFR	Visual Flight Rules
VHF	Very High Frequency
VMC	Visual Meteorological Conditions
VOR	VHF Omni-directional Radio Range
VLOC	VOR / Localizer
W	Warning
WPT	Waypoint
XFILL	Cross fill
XM	XM Satellite-based weather information

© Copyright 2016 Aspen Avionics Inc.

2 Limitations

The following limitations pertain to the installed equipment in the aircraft. See Table 1 for the list of installed equipment in this aircraft.

2.1 Kinds of Operation for the PFD PRO, PFD PRO C3, PFD PILOT or PFD VFR

This is a list of installed Aspen equipment that affects flight operations. This list does not preclude any approved Minimum Equipment List or other equipment required by regulation.

See the aircraft placard located on the flight deck to determine if this aircraft is authorized for Day, Night, VFR or IFR.

At minimum, one vertical column of equipment must be operational for flight. See Table 1 for the equipment installed in this aircraft:

Example: There is a placard in clear view of the pilot that specifies the kind of operations to which the operation of the airplane is limited or from which it is prohibited. If the placard shows authorization for IFR and the aircraft has an operational EFD1000 PFD and EFD1000 MFD, Magnetic Compass, Standby Altimeter, Standby Airspeed Indicator and IFR GPS (Configuration 2), and the aircraft has all the other equipment and certifications required by regulation, the aircraft is qualified for IFR flight.

Table 3 - Minimum Equipment Required for a Flight Operation

	Day VFR	Day/ Night VFR	Day/ Night VFR	IFR Config. 1	IFR Config. 2	IFR Config. 3
EFD1000 PFD (includes PRO, VFR or PILOT)	✓	✓		✓	✓	✓
EFD1000 MFD with EBB		✓		✓		
EFD1000 MFD with Internal Battery					✓	
Magnetic Compass	✓	✓	✓	✓	✓	✓
Standby Attitude Indicator				✓	✓	✓
Standby Airspeed Indicator			✓		✓	✓
Standby Altimeter			✓		✓	✓
IFR Approved GPS				✓	✓	

2.2 EFD1000 PFD System Limitations

1. The moving map display is not a substitute for approved maps or charts required by the operating rules.
2. For the Evolution **Synthetic Vision** option, the following limitations apply:
   a. Maneuvering based solely on the EFD1000 terrain and obstacle depiction is not authorized.
   b. Obstacles on the Synthetic Vision display can be concealed by overlaid indicators such as AOA.
   c. Navigation or maneuvering based solely on the EFD1000 Synthetic Vision background display and associated Terrain Warning System (TWS) is not authorized.
   d. Barometric pressure must be set accurately for proper operation.

© Copyright 2016 Aspen Avionics Inc.

e. Cold temperatures affect the accuracy of the SV system.

3. For the **Traffic and Weather** options, the following limitations apply:
   a. Maneuvering based solely on the traffic display is not authorized.
   b. XM Weather information shown on the EFD1000 PFD is supplemental to data available from official sources.
   c. NEXRAD data is limited to the contiguous United Status.
   d. FIS-B information is to be used for pilot planning decisions and pilot near-term decisions focused on avoiding areas of inclement weather that are beyond visual range or where poor visibility precludes visual acquisition of inclement weather.
   e. FIS-B information, including, weather information, NOTAMs, and TFR areas, are intended for the sole purpose of assisting in long- and near-term planning decision making. The system lacks sufficient resolution and updating capability necessary for aerial maneuvering associated with immediate decisions.
4. For **IFR operations** (if this aircraft is authorized for IFR operations) the following limitations apply. See the aircraft placard located on the flight deck to determine if this aircraft is authorized for Day/Night/VFR or IFR.
   a. Use of the EFD1000 for IFR operations in the region within 750 nautical miles of the magnetic North or South Pole, based solely upon the attitude and heading data provided by the EFD1000, is NOT AUTHORIZED.
   b. For seaplane operation, if the ADAHRS is unable to align due to wave action, departure under IMC or IFR is PROHIBITED.
   c. Takeoff with aircraft voltage (as indicated on the EFD) below 12.3V (14V electrical system) or 24.6V (28V electrical system) is NOT AUTHORIZED.
5. The RSM GPS is limited to EMERGENCY USE ONLY.
6. Barometric pressure must be set accurately for proper terrain depiction.
7. Cold temperatures affect the accuracy of the terrain depiction.
8. For the **EFD1000 PFD VFR**, flying coupled approaches with vertical guidance based solely on the EFD1000 PFD VFR is not authorized. The EFD1000 PFD VFR does not display vertical deviations for the pilot to monitor glide path performance.
9. For the **AOA SYSTEM**, the following limitations apply:
   a. The AOA system is non-required and is to be used only as supplemental information to show the stall margin and trend toward stall. The AOA system is not a substitute for the certified aircraft stall warning system.
   b. Airspeed failure or erroneous airspeed will result in erroneous AOA indications.
   c. No operational credit may be taken for such items as reduced approach speed and shorter landing distances.
   d. The AOA indications are not to be used for takeoff reference.
   e. The AOA indications are not valid when the wings or empennage are frost or ice-contaminated.
   f. The AOA indications are not valid when spoilers or speed brakes are deployed.
10. When the **EFD1000 PFD EBD Advanced or EFD1000 PFD EBD Basic** is required for operation, the following limitations apply:
    a. When the EBB charge status is less than 80% or has failed, takeoff is NOT AUTHORIZED.

© Copyright 2016 Aspen Avionics Inc.

b. When the cabin temperature is below -20°C, takeoff is NOT AUTHORIZED.

c. When the "ON BAT" annunciation is shown on any EFD display, takeoff is NOT AUTHORIZED.

d. Barometric pressure must be set on the EBD.

2.3 EFD1000 and EFD500 MFD System Limitations

1. Maneuvering based solely on the EFD1000 terrain and obstacle depiction is not authorized.
2. For the Evolution **Synthetic Vision** option, the following limitations apply:
   a. Obstacles on the Synthetic Vision display can be concealed by overlaid indicators such as AOA.
   b. Navigation or maneuvering based solely on the EFD1000 or MFD500 Synthetic Vision background display and associated Terrain Warning System (TWS) is not authorized.
   c. Barometric pressure must be set accurately for proper operation.
   d. Cold temperatures affect the accuracy of the SV system.
3. The moving map displays are not a substitute for approved maps or charts required by the operating rules.
4. The RSM GPS is limited to EMERGENCY USE ONLY.
5. Barometric pressure must be set accurately for proper terrain depiction.
6. Cold temperatures affect the accuracy of the terrain depiction.
7. When the EFD1000 MFD is used as the **backup altimeter and/or airspeed indicator** (see Table 2), the following limitations apply:
   a. When the EBB charge status is less than 80% or has failed, takeoff is NOT AUTHORIZED.
   b. When the cabin temperature is below -20°C, takeoff is NOT AUTHORIZED.
   c. When the "ON BAT" annunciation is shown on any EFD display, takeoff is NOT AUTHORIZED.
8. For **Traffic and Weather** options, the following limitations apply:
   a. Maneuvering based solely on the traffic display is not authorized.
   b. XM Weather information is supplemental to data available from official sources.
   c. NEXRAD data is limited to the contiguous United States.
   d. FIS-B information is to be used for pilot planning decisions and pilot near-term decisions focused on avoiding areas of inclement weather that are beyond visual range or where poor visibility precludes visual acquisition of inclement weather.
   e. FIS-B information, including, weather information, NOTAMs, and TFR areas, are intended for the sole purpose of assisting in long- and near-term planning decision making. The system lacks sufficient resolution and updating capability necessary for aerial maneuvering associated with immediate decisions.
9. For the **Terminal Procedure Charts** option, the following limitations apply:
   a. The aircraft ownship position presented on the Airport Diagrams and Terminal Procedures charts may be inaccurate – reference to ownship position for navigation or maneuvering is prohibited.
   b. Except as provided for by regulation, the Terminal Procedures Charts depictions on the EFD are not substitutes for aeronautical charts required to be carried aboard the

© Copyright 2016 Aspen Avionics Inc.

aircraft. This function does not replace any system or equipment required by the regulations.

10. For the **Aspen CG100 Connected Gateway (CG100)** option, the following limitations apply:
    a. The Flight Plan Review Map is not to be used for navigation.
    b. The pilot must verify that the flight plan as shown on the MFD is correct and authorized before sending the flight plan to the navigator(s).
    c. The Aspen GTWY and the associated applications on the wireless portable device are only to be used as intended by Aspen Avionics. Any manipulation of the system or unauthorized access is prohibited.
11. For the **AOA SYSTEM**, the following limitations apply:
    a. The AOA system is non-required and is to be used only as supplemental information to show the stall margin and trend toward stall. The AOA system is not a substitute for the certified aircraft stall warning system.
    b. Airspeed failure or erroneous airspeed will result in erroneous AOA indications.
    c. No operational credit may be taken for such items as reduced approach speed and shorter landing distances.
    d. The AOA indications are not to be used for takeoff reference.
    e. The AOA indications are not valid when the wings or empennage are frost or ice-contaminated.
    f. The AOA indications are not valid when spoilers or speed brakes are deployed.

2.4 Placards

1. When the EBB is installed, the following placard must be installed in full view of the pilot:

EMER BAT DISPATCH LIMIT 80% SEE EFD AFMS

2. When the EA100 is installed, the following placard must be installed in full view of the pilot:

A/P AHRS FAIL

3. When the EFD1000 VFR PFD is installed, the following placard must be installed in full view of the pilot:

No Vertical Deviation on PFD

© Copyright 2016 Aspen Avionics Inc.

4. During initialization of the EFD1000 MFD and EFD500 MFD, the following electronic placard is displayed if Synthetic Vision and instrument procedure charts are configured:

> **CAUTION:**
> Synthetic Vision information and terrain information are for awareness Only. Do not maneuver based solely on this Information.
>
> The aircraft ownship position presented on Instrument Procedure Charts and Airport Diagrams may be inaccurate - reference to ownship position for navigation or maneuvering is prohibited.

5. During initialization of the EFD1000 PFD, the following electronic placard is displayed if Synthetic Vision is configured:

> **CAUTION:**
> Synthetic Vision information and terrain information are for awareness Only. Do not maneuver based solely on this Information.

6. When the Aspen Synthetic Vision Demo is configured and the trial period is not expired, the following electronic placard is displayed:

> **CAUTION:**
> Aspen Synthetic Vision Demo
> Time Remaining: ## Hours ## Minutes
>
> Synthetic Vision information and Terrain information are for awareness Only. Do not maneuver based solely on this Information.

7. When the Aspen Synthetic Vision Demo is configured and the trial period has expired, the following electronic placard is displayed:

> **CAUTION:**
> Aspen Synthetic Vision Demo has Expired
> To Re-Enable SV, See your Authorized Dealer

8. During initialization of the EFD1000 PFD and EFD1000/500 MFD, the following electronic placard is displayed if the AOA System is configured:

> **CAUTION:**
> The AOA Indicator is not for use as a primary instrument for flight.

© Copyright 2016 Aspen Avionics Inc.

3 Emergency/Abnormal Procedures

3.1 Emergency Procedures

No Change to the aircraft procedures.

3.2 Abnormal Procedures

3.2.1 Pitot Tube Icing resulting in Attitude Indicator Failure and Erroneous Airspeed indication

1. PITOT HEAT ..... ON
2. AUTOPILOT ..... DISCONNECT
3. ATTITUDE ..... Maintain attitude by reference to standby sources of Attitude
4. Consider Exiting IMC

3.2.2 "ON BAT" Annunciation

The "ON BAT annunciation is an indication that the alternator or generator has failed.

1. Aircraft Electrical Power ..... Follow AFM Procedures to Restore Power. If unable to restore the alternator or generator, proceed as follows:
2. EFD1000/500 Circuit Breaker / Switch ..... Pull / Open (turn off) for each Display
3. Press MENU then turn the Left knob ..... Reduce the Display brightness to the lowest practical brightness to conserve battery energy.
4. Exit IMC as soon as practical.

NOTE:
The duration of the internal battery system (at 99% remaining) is less than 30 minutes. The duration of the Emergency Backup Battery (at 99% remaining) is more than 30 minutes.

CAUTION:
When the EFD is operated until its battery is exhausted, the screen may fade to solid white for several seconds before blanking. To avoid this condition at night, manually turn off the EFD once the display shows 0% battery remaining.

3.2.3 EFD1000 MFD reversion to a PFD

1. Autopilot ..... DISCONNECT
2. EFD1000 MFD REV Button ..... MOMENTARY PRESS to show the Reversionary PFD Display
3. REVERSIONARY PFD Display ..... Select XFILL as desired
4. BARO SETTING ..... Verify
5. A/P Source Select (if installed) ..... MFD
6. Autopilot ..... CONNECT AS DESIRED

NOTE:
The altitude level-off alert tone, altitude deviation alert tone and synthetic vision caution and warning tones are not available on a reversionary PFD

© Copyright 2016 Aspen Avionics Inc.

3.2.4 Attitude and Heading (AHRS) Reset

1. AUTOPILOT ..... MANUALLY DISCONNECT
2. MENU ..... Select the first page, titled "GENERAL SETTINGS"
3. "AHRS: RESET?" LINE SELECT KEY ..... PRESS
4. "AHRS: RESET?" LINE SELECT KEY ..... PRESS AGAIN TO CONFIRM RESET

3.2.5 Turn Off the EFD in Flight

<u>EFD1000 MFD (with EBB), EFD1000 PFD EBD Advanced or EFD1000 PFD EBD Basic</u>

1. EFD (Aspen) Circuit Breaker / Switch ..... PULL / OFF
2. EBB Disconnect Switch ..... DISC

<u>EFD1000/500 PFD or MFD with Internal Battery</u>

1. EFD Circuit Breaker / Switch ..... PULL / OFF
2. REV Button ..... Push and hold until the display turns off

3.2.6 Continuous EFD1000 or EFD500 System Reset (does not apply to C3 PFD)

In the event of a condition that causes the system to continually reset, proceed as follows:

1. REMOVE THE DATABASE CARD ..... PERMIT THE SYSTEM TO REINITIALIZE.
   If the condition persists, then:
2. TURN OFF THE Aspen GTWY SWITCH. PERMIT THE SYSTEM TO REINITIALIZE.
   If the condition persists, then:
3. PULL THE ADS-B
   CIRCUIT BREAKER ..... PERMIT THE SYSTEM TO REINITIALIZE
   If the condition persists, then:
4. PULL THE XM WEATHER
   CIRCUIT BREAKER ..... PERMIT THE SYSTEM TO REINITIALIZE.
   If the condition persists, then:
5. PULL THE STORMSCOPE
   CIRCUIT BREAKER ..... PERMIT THE SYSTEM TO REINITIALIZE.

3.3 Warnings, Cautions and Advisories

The following table shows the Warning, Caution and Advisory indication on the EFD1000 and EFD500 and identifies the appropriate pilot action. Several Warning, Caution and Advisory messages are dependent on the options and equipment installed in the airplane. Refer to Table 1 to determine the options and equipment installed in this airplane.

© Copyright 2016 Aspen Avionics Inc.

Table 4 - Warning, Caution and Advisory Annunciations

Warning	W	Caution	C	Advisory	A

	Applies to:							Annunciation	Description	Pilot Action
	EFD1000 PFD PRO C3	EFD1000 PFD PRO -or- EFD1000 PFD EBD Advanced	EFD 1000 VFR	EFD1000 PFD PILOT -or- EBD1000 PFD EBD Basic	EFD 1000 MFD REV	EFD 1000 MFD	EFD 500 MFD			
W	✓	✓	✓	✓	✓	✓	✓		Presented whenever the EFD1000 is operating on the internal battery or EBB. The countdown timer appears first, and is then replaced by the ON BAT and % charge annunciation	Reduce the screen brightness to maximize battery duration. See Section 3.2.2 "ON BAT" Annunciation.
W	✓	✓	✓	✓	✓	✓		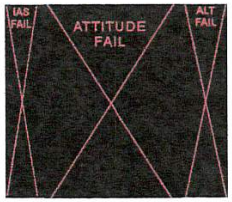 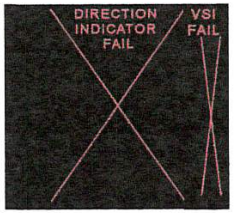	Attitude and Heading indications have failed.	Use standby instruments for attitude reference. Perform AHRS Reset if practical.
W	✓	✓	✓	✓	✓	✓		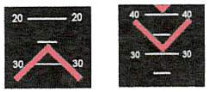	Red chevrons displayed on the Attitude Indicator's pitch scale to indicate extreme pitch up and down attitudes.	Pitch the aircraft in the direction of the chevrons to restore level flight.

© Copyright 2016 Aspen Avionics Inc.

	Applies to:							Annunciation	Description	Pilot Action
	EFD1000 PFD PRO C3	EFD1000 PFD PRO -or- EFD1000 PFD EBD Advanced	EFD 1000 VFR	EFD1000 PFD PILOT -or- EBD1000 PFD EBD Basic	EFD 1000 MFD REV	EFD 1000 MFD	EFD 500 MFD			
W		✓			✓	✓	✓	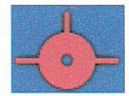	Synthetic Vision Flight Path marker. Terrain or obstacle conflict within 30 seconds.	Avoid the terrain or obstacle.
W	✓	✓			✓				Radar Altitude Failed	Use alternate means for altitude determination.
W		✓			✓	✓	✓	Or	Synthetic Vision system terrain or obstacle conflict within 30 seconds.	Avoid the terrain or obstacle.
W	✓	✓	✓		✓	✓	✓	MAP SW 2.6 and earlier: MAP SW 2.7.2 and later: MAP SW 2.7.2: MAP SW 2.8 and later:	XM Weather or Traffic Failure	Use an alternate weather information source Increase vigilance for traffic.

© Copyright 2016 Aspen Avionics Inc.

	Applies to:							Annunciation	Description	Pilot Action
	EFD1000 PFD PRO C3	EFD1000 PFD PRO -or- EFD1000 PFD EBD Advanced	EFD 1000 VFR	EFD1000 PFD PILOT -or- EBD1000 PFD EBD Basic	EFD 1000 MFD REV	EFD 1000 MFD	EFD 500 MFD			
W		✓	✓		✓	✓	✓	RGNL :	FIS-B Regional NEXRAD data is not valid	Use an alternate weather information source.
W						✓	✓	CNUS :	FIS-B CONUS NEXRAD data is not valid	Use an alternate weather information source.
W						✓	✓	AGE :	FIS-B METAR data is not valid	Use an alternate weather information source.
W						✓	✓	AIR SIG	FIS-B AIRMET/SIGMET data is not valid.	Use an alternate weather information source.
W						✓	✓	Issued: : Z Valid: Z Z	FIS-B wind and temperature data is not valid	Use an alternate weather information source.
W						✓	✓	TFR	FIS-B TFR data not received.	Use an alternate weather information source.
W		✓	✓		✓	✓	✓	MAP SW 2.6 and earlier +RATE MAP SW 2.7 and later +RATE	Stormscope (STRK) has failed.	No action. Avoid thunderstorms.
W	✓	✓	✓		✓			LOC ↑VOR1	The navigation source is not available.	Use an alternate navigation source

© Copyright 2016 Aspen Avionics Inc.

	Applies to:							Annunciation	Description	Pilot Action
	EFD1000 PFD PRO C3	EFD1000 PFD PRO -or- EFD1000 PFD EBD Advanced	EFD 1000 VFR	EFD1000 PFD PILOT -or- EBD1000 PFD EBD Basic	EFD 1000 MFD REV	EFD 1000 MFD	EFD 500 MFD			
W	✓	✓	✓		✓	✓		GPS1	The navigation source is not available.	Use an alternate navigation source.
W						✓	✓	AOA FAIL	The Angle Of Attack System has failed.	No Action- The AOA is unusable.
W		✓	✓	✓	✓			AOA	The Angle Of Attack System has failed	No Action – The AOA is unusable. The AOA indication can be removed using the menu.
C								**Panel Mounted Indicator Lamp** **A/P AHRS Fail** or A/P AHRS FAIL	The attitude system provided to the autopilot has failed.	Fly manually. The autopilot will disconnect and cannot be re-engaged.
C	✓	✓	✓	✓	✓	✓		CROSS CHECK ATTITUDE	Attitude indication could be degraded.	Cross check attitude, airspeed and altitude indications against alternate sources.
C						✓		ADAHRS FAIL	MFD Attitude failure.	No immediate action. MFD reversion is not available.

© Copyright 2016 Aspen Avionics Inc.

	Applies to:							Annunciation	Description	Pilot Action
	EFD1000 PFD PRO C3	EFD1000 PFD PRO -or- EFD1000 PFD EBD Advanced	EFD 1000 VFR	EFD1000 PFD PILOT -or- EBD1000 PFD EBD Basic	EFD 1000 MFD REV	EFD 1000 MFD	EFD 500 MFD			
C						✓		CHECK AHRS	MFD attitude could be degraded.	No immediate action. MFD reversion attitude indicator could be degraded.
C						✓	✓	CROSS LINK FAILURE	No communication between PFD and MFD(s).	Barometric pressure must be set on PFD and MFD.
C						✓	✓	(HDG FAIL)	Failed heading on the MFD	No immediate action. MFD Heading up map orientation is not available, reverts to track-up. Fails Strikes (Stormscope) system.
C	✓	✓	✓	✓	✓	✓		CHECK PITOT HEAT	Possible Pitot Obstruction. Accompanied by Red X attitude and heading.	Use an alternate attitude and heading source. Turn on Pitot Heat to clear the condition if icing is the cause.

© Copyright 2016 Aspen Avionics Inc.

	Applies to:							Annunciation	Description	Pilot Action
	EFD1000 PFD PRO C3	EFD1000 PFD PRO -or- EFD1000 PFD EBD Advanced	EFD 1000 VFR	EFD1000 PFD PILOT -or- EBD1000 PFD EBD Basic	EFD 1000 MFD REV	EFD 1000 MFD	EFD 500 MFD			
C		✓			✓			NAV APR NAV NAV GPSS NAV APR APR REV REV	(Flashing) Invalid Lateral Navigation Signal on the S-TEC 55X. Corresponds to NAV, APR, GPSS or REV and diagonal FAIL indication on the 55X Programmer/Computer.	According to the S-TEC 55X AFMS.
C		✓			✓			ALT GS GS	(Flashing) Invalid Vertical Navigation Signal on the S-TEC 55X. Corresponds to ALT and GS, and diagonal FAIL indication on the 55X Programmer/Computer.	According to the S-TEC 55X AFMS.
C		✓			✓			TRIMMING	S-TEC 55X Trimming Alert. Corresponds to TRIM on the S-TEC 55X Programmer/Computer.	Monitor for runaway trim.
C		✓			✓			NO COMMUNICATION FROM AUTOPILOT	No communication from the autopilot. Vertical speed control and altitude preselect are not available on the EFD1000 PFD.	Control the autopilot from the S-TEC 55X Programmer/Computer.

© Copyright 2016 Aspen Avionics Inc.

	Applies to:							Annunciation	Description	Pilot Action
	EFD1000 PFD PRO C3	EFD1000 PFD PRO -or- EFD1000 PFD EBD Advanced	EFD 1000 VFR	EFD1000 PFD PILOT -or- EBD1000 PFD EBD Basic	EFD 1000 MFD REV	EFD 1000 MFD	EFD 500 MFD			
C		✓	✓		✓			FAIL AUTOPILOT INOP	S-TEC 55X Failure Annunciation.	Disconnect the autopilot and manually fly the airplane.
C	✓	✓	✓	✓	✓	✓	✓	GPS1 GPS2 RSM GPS GPS1 REVERSION GPS2 REVERSION RSM GPS REVERSION EMER USE ONLY	GPS Invalid indications	Select an operational GPS or alternate navigation.
C		✓			✓	✓	✓		Synthetic Vision Flight Path marker. Terrain or obstacle conflict within 45 seconds.	Avoid the terrain or obstacle.
C		✓			✓	✓	✓	CAUTION – TERRAIN, TERRAIN CAUTION – OBSTACLE, OBSTACLE	Synthetic Vision system terrain or obstacle conflict within 45 seconds.	Avoid the terrain or obstacle.
C						✓	✓	GPS POS FAILED	NAV and Terrain Map indication when of all Navigation GPS devices have failed.	No immediate action. NAV and terrain maps no longer move with the aircraft.

© Copyright 2016 Aspen Avionics Inc.

	Applies to:							Annunciation	Description	Pilot Action
	EFD1000 PFD PRO C3	EFD1000 PFD PRO -or- EFD1000 PFD EBD Advanced	EFD 1000 VFR	EFD1000 PFD PILOT -or- EBD1000 PFD EBD Basic	EFD 1000 MFD REV	EFD 1000 MFD	EFD 500 MFD			
C	✓	✓	✓	✓	✓	✓		INTEG	GPS Integrity indication	The GPS in use is degraded. See the applicable GPS AFMS for more information.
C	✓	✓			✓			MIN 10010	The aircraft has reached or is below the set MINIMUMS. Accompanied by a one-second stuttered tone when the optional tone generator is installed.	Pilot action is based on the reason the minimums setting was enabled.
C	✓	✓	✓	✓	✓			9940	The aircraft has reached (steady) or deviated from (flashing) the selected altitude. Accompanied by a one-second steady tone when the optional tone generator is installed.	Pilot action is based on the reason the altitude alerting setting was enabled.
C	✓	✓			✓			DH	The optional radar altimeter Decision height input indicates the aircraft is at or below the radar altitude set by the pilot.	Pilot action is based on the reason the DH was set on the radar altimeter.
C	✓	✓	✓		✓			HDG GPSS GPSS	Indicates the GPSS source is invalid (e.g. the flight plan was deleted) or a different GPS was selected by the pilot. The autopilot will fly wings-level until valid GPSS signal is available and GPSS is re-engaged.	No immediate action. Select a new flight plan to permit GPSS re-engagement.

© Copyright 2016 Aspen Avionics Inc.

	Applies to:							Annunciation	Description	Pilot Action
	EFD1000 PFD PRO C3	EFD1000 PFD PRO -or- EFD1000 PFD EBD Advanced	EFD 1000 VFR	EFD1000 PFD PILOT -or- EBD1000 PFD EBD Basic	EFD 1000 MFD REV	EFD 1000 MFD	EFD 500 MFD			
C						✓	✓	TERRAIN FAIL	The dedicated terrain display is unusable.	No immediate action.
C		✓			✓	✓	✓	TRAFFIC 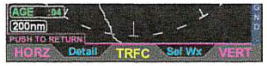	Traffic Alert. TFC is shown instead of TRFC for MAP SW 2.8 and later.	See and avoid the traffic. Press TRFC (lower center button) to display a plan view of the traffic.
C	✓	✓	✓		✓	✓	✓	MAP SW 2.7.2 and earlier: TRFC UNAV MAP SW 2.8 and later: TFC UNAV	TIS-A option: Traffic data is unavailable.	No immediate action. See and avoid traffic.
C	✓	✓	✓		✓	✓	✓	MAP SW 2.7.2 and earlier: TRFC RMVD MAP SW 2.8 and later: TFC RMVD	TIS-A option: Traffic was removed. The PFD does not display the AGE.	No immediate action. See and avoid traffic.
C						✓	✓	MAP SW 2.7.2 and earlier: TRFC FAIL MAP SW 2.8 and later: TFC FAIL	TIS-A option: Traffic sensor failure.	No immediate action. See and avoid traffic.

© Copyright 2016 Aspen Avionics Inc.

	Applies to:							Annunciation	Description	Pilot Action
	EFD1000 PFD PRO C3	EFD1000 PFD PRO -or- EFD1000 PFD EBD Advanced	EFD 1000 VFR	EFD1000 PFD PILOT -or- EBD1000 PFD EBD Basic	EFD 1000 MFD REV	EFD 1000 MFD	EFD 500 MFD			
C		✓	✓					UAT LINK	ADS-B OUT: The UAT link between the ADS-B system and the PFD has failed. This message can only be presented when integrated with the Aspen or FreeFlight ADS-B OUT System.	No immediate action.
C		✓	✓					UAT POS	ADS-B OUT: The UAT position source has failed. This message can only be presented when integrated with the Aspen or FreeFlight ADS-B OUT System.	No immediate action.
C		✓	✓					UAT FAIL	ADS-B OUT: The UAT transmitter has failed. This message can only be presented when integrated with the Aspen or FreeFlight ADS-B OUT System.	No immediate action.
C						✓	✓	TFC DEGRADED	No ADS-B Traffic data uplinked from the ground or GDL 88 or GTX 345 is in Standby.	No immediate action. See and avoid traffic.
C		✓	✓		✓	✓	✓	TFC	No ADS-B Traffic data uplinked from the ground or GDL 88 or GTX 345 is in Standby.	No immediate action. See and avoid traffic.
C		✓	✓		✓	✓	✓	CSA FAIL	Conflict Situational Awareness -traffic alerting is inoperative. GDL 88 or GTX 345 integration only.	Traffic alerting is not provided. See and avoid traffic.

© Copyright 2016 Aspen Avionics Inc.

	Applies to:							Annunciation	Description	Pilot Action
	EFD1000 PFD PRO C3	EFD1000 PFD PRO -or- EFD1000 PFD EBD Advanced	EFD 1000 VFR	EFD1000 PFD PILOT -or- EBD1000 PFD EBD Basic	EFD 1000 MFD REV	EFD 1000 MFD	EFD 500 MFD			
C						✓	✓	FAIL	Stormscope Option: Sensor has failed.	No immediate action. Use an alternate means to detect thunderstorms.
C						✓	✓	ERROR	Stormscope Option: Sensor has failed.	No immediate action. Use an alternate means to detect thunderstorms.
C		✓	✓		✓	✓	✓	NXRD : LTNG : SIG : AIR : AGE : TFR :	XM Datalink weather product data not received.	No immediate action. Use alternate means to acquire weather and TFR information.
C		✓	✓		✓	✓	✓	RGNL :	FIS-B Datalink weather product data not received.	No immediate action. Use alternate means to acquire weather and TFR information.

© Copyright 2016 Aspen Avionics Inc.

	Applies to:							Annunciation	Description	Pilot Action
	EFD1000 PFD PRO C3	EFD1000 PFD PRO -or- EFD1000 PFD EBD Advanced	EFD 1000 VFR	EFD1000 PFD PILOT -or- EBD1000 PFD EBD Basic	EFD 1000 MFD REV	EFD 1000 MFD	EFD 500 MFD			
C						✓	✓	CNUS : AGE : Issued: --:--Z Valid: --Z - --Z AIR SIG TFR	FIS-B Datalink weather product data not received.	No immediate action. Use alternate means to acquire weather and TFR information.
C	✓	✓	✓	✓	✓	✓		FREE GYRO MODE FMG	Annunciation presented on the HSI whenever the HSI compass card is no longer receiving magnetic corrections. After 6 minutes of free gyro operation the attitude and heading solutions will be removed.	No immediate action. Expect attitude loss after six minutes.
C	✓	✓	✓	✓	✓	✓	✓	BAT: FAILED	Annunciation presented in the menus when the connected EFD battery is not detected or failed	No immediate action. The EFD display will not be available in the event of an aircraft power loss. If the MFD is used for backup altimeter and/or airspeed indicator, takeoff is not authorized. See Section 2.3.

© Copyright 2016 Aspen Avionics Inc.

	Applies to:							Annunciation	Description	Pilot Action
	EFD1000 PFD PRO C3	EFD1000 PFD PRO -or- EFD1000 PFD EBD Advanced	EFD 1000 VFR	EFD1000 PFD PILOT -or- EBD1000 PFD EBD Basic	EFD 1000 MFD REV	EFD 1000 MFD	EFD 500 MFD			
C		✓	✓	✓	✓	✓	✓		When the Upper Pointer points in the yellow/black band, stall is imminent in the Flaps Up configuration.	Reduce the Angle of Attack.
C		✓	✓	✓	✓	✓	✓	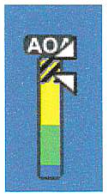	When the Lower Pointer points in the yellow/black band, stall is imminent in the Flaps Down configuration.	Reduce the Angle of Attack.
C		✓	✓	✓	✓	✓	✓		When the Upper Pointer points in the yellow band, the airplane is nearing stall in the Flaps Up configuration. When the Lower Pointer points in the yellow band, the airplane is nearing stall in the Flaps Down configuration.	Reduce the Angle of Attack.
A		✓	✓	✓	✓	✓	✓		When the Upper Pointer points in the green band, the stall margin for the Flaps Up configuration is well above stall.	No action.

© Copyright 2016 Aspen Avionics Inc.

	Applies to:							Annunciation	Description	Pilot Action
	EFD1000 PFD PRO C3	EFD1000 PFD PRO -or- EFD1000 PFD EBD Advanced	EFD 1000 VFR	EFD1000 PFD PILOT -or- EBD1000 PFD EBD Basic	EFD 1000 MFD REV	EFD 1000 MFD	EFD 500 MFD			
A		✓	✓	✓	✓	✓	✓		When the Lower Pointer points in the green band, the stall margin for the Flaps Down configuration is well above stall.	No action.
A	✓	✓	✓		✓				GPSS is operational	No action. GPSS can be used if desired.
A	✓	✓	✓		✓	✓			GPS annunciations that are provided by the GPS source. TERM can also be displayed in the same location as APPR.	No action. See the GPS AFMS for additional information on the meaning of these annunciations.
A		✓	✓					UAT CTL: MENU	When this message is displayed, the PFD is the UAT controller.	Press MENU to access the page to change the Code or to IDENT.

© Copyright 2016 Aspen Avionics Inc.

	Applies to:							Annunciation	Description	Pilot Action
	EFD1000 PFD PRO C3	EFD1000 PFD PRO -or- EFD1000 PFD EBD Advanced	EFD 1000 VFR	EFD1000 PFD PILOT -or- EBD1000 PFD EBD Basic	EFD 1000 MFD REV	EFD 1000 MFD	EFD 500 MFD			
A	✓	✓	✓		✓	✓	✓	MAP SW 2.7.2 and earlier: TRFC MAP SW 2.8 and later: TFC TFC ID	Green annunciation that indicates that the traffic sensor is enabled. ID after TFC indicates that traffic identification is displayed if available. This annunciation does not indicate the status of the ADS-B traffic data uplinked from the ground.	No action. See and avoid traffic.
A						✓	✓	MAP SW 2.7.2 and earlier: TRFC STBY MAP SW 2.8 and later: TFC STBY	Green annunciation that indicates that the traffic sensor is in standby.	No action. See and avoid traffic.
A	✓	✓	✓		✓	✓	✓	MAP SW 2.7.2 and earlier: TRFC COAST MAP SW 2.8 and later: TFC COAST	Green annunciation that indicates that the TIS A traffic data has not been refreshed within 6 seconds.	No action. See and avoid traffic.
A		✓	✓		✓	✓	✓	XRATE 9	Stormscope (strike) option: The rate indicates the approximate number of lightning strikes detected per minute.	No action. Avoid thunderstorms.

© Copyright 2016 Aspen Avionics Inc.

	Applies to:							Annunciation	Description	Pilot Action
	EFD1000 PFD PRO C3	EFD1000 PFD PRO -or- EFD1000 PFD EBD Advanced	EFD 1000 VFR	EFD1000 PFD PILOT -or- EBD1000 PFD EBD Basic	EFD 1000 MFD REV	EFD 1000 MFD	EFD 500 MFD			
A		✓	✓		✓	✓	✓	+RATE 6	Stormscope (strike) option: Cell clustering display mode selected. The rate indicates the approximate number of lightning strikes detected per minute.	No action. Avoid thunderstorms.
A		✓	✓		✓	✓	✓	AGE :05 AIR :02 SIG :11 NXRD :08 LTNG :03	A data age annunciation for XM Datalink products	No action. Useful reference for weather data evaluation. NOTE: The data may be several minutes older than the time shown. It is not real-time data.
A		✓	✓		✓	✓	✓	RGNL :	A data age annunciation for ADS-B weather products.	No action. Useful reference for weather data evaluation. NOTE: The data may be several minutes older than the time shown. It is not real-time data.
A						✓	✓	AGE : TFR Issued: 02:02Z Valid: 02Z – 09Z AIR SIG	A data age annunciation for ADS-B weather products.	No action. Useful reference for weather data evaluation. NOTE: The data may be several minutes older than the time shown. It is not real-time data.

© Copyright 2016 Aspen Avionics Inc.

	Applies to:							Annunciation	Description	Pilot Action
	EFD1000 PFD PRO C3	EFD1000 PFD PRO -or- EFD1000 PFD EBD Advanced	EFD 1000 VFR	EFD1000 PFD PILOT -or- EBD1000 PFD EBD Basic	EFD 1000 MFD REV	EFD 1000 MFD	EFD 500 MFD			
A		✓			✓			AP FD RDY CWS	S-TEC 55X annunciations.	No action.
A		✓			✓			HDG NAV REV HDG NAV APR HDG APR REV HDG NAV GPSS HDG REV NAV GPSS NAV APR APR REV	S-TEC 55X annunciations.	No action.

© Copyright 2016 Aspen Avionics Inc.

	Applies to:							Annunciation	Description	Pilot Action
	EFD1000 PFD PRO C3	EFD1000 PFD PRO -or- EFD1000 PFD EBD Advanced	EFD 1000 VFR	EFD1000 PFD PILOT -or- EBD1000 PFD EBD Basic	EFD 1000 MFD REV	EFD 1000 MFD	EFD 500 MFD			
A		✓			✓			ALT VS GS ALT GS	S-TEC 55X annunciations.	No action.
A						✓	✓	DATABASE FAIL	Database Failure	No action. Functions that require a database are not available. See Table 1.
A						✓	✓	MAP LOADING...	The Database for the NAV Map is loading	No action. Not all the available data on the NAV Map is displayed yet.
A						✓	✓	OWNSHIP NOT AVAILABLE	Charts Option: The ownship cannot be displayed.	No action.
A						✓	✓	OWNSHIP OFF CHART	Charts Option: The ownship is off the chart.	No action.
A		✓			✓	✓	✓	SV UNAVAILABLE : ADAHRS FAIL	Synthetic Vision Option: Failed	No action
A		✓			✓	✓	✓	SV POSITION INVALID	Synthetic Vision Option: Failed	No action
A		✓			✓	✓	✓	DATABASE FAIL	Synthetic Vision Option: Failed	No action
A		✓			✓	✓	✓	DATABASE INIT	Synthetic Vision Option: Not yet operational	No action

© Copyright 2016 Aspen Avionics Inc.

	Applies to:							Annunciation	Description	Pilot Action
	EFD1000 PFD PRO C3	EFD1000 PFD PRO -or- EFD1000 PFD EBD Advanced	EFD 1000 VFR	EFD1000 PFD PILOT -or- EBD1000 PFD EBD Basic	EFD 1000 MFD REV	EFD 1000 MFD	EFD 500 MFD			
A		✓			✓	✓	✓	SV DATABASE UNAVAILABLE	Synthetic Vision Option: Failed	No action
A		✓			✓	✓	✓	SV LOADING...	Synthetic Vision Option: Not yet operational	No action
A		✓			✓	✓	✓	MAP LOADING...	Synthetic Vision Option: Not yet operational	No action
A		✓			✓	✓	✓		A white flight path marker indicates that approach TWS alerts are available (Terrain Alerts will be generated by terrain 100 feet higher than the runway elevation and all mapped obstacles).	No action
A		✓	✓		✓			OBSTACLE BEHIND AOA	Synthetic Vision Option: An obstacle that is behind the AOA indicator for more than five seconds will elicit this message.	No action
A		✓	✓	✓	✓			AOA AUTO	The AOA indicator is available for display but removed to reduce clutter. This message will be shown until the AOA indicator presents useful information.	No action

© Copyright 2016 Aspen Avionics Inc.

4 Normal Procedures

4.1 Exterior Inspection

1. RSM ..... Check for condition and security
2. RSM Vent Hole ..... Check Clear of obstructions
3. RSM Lightning Tape ..... Check for condition and security

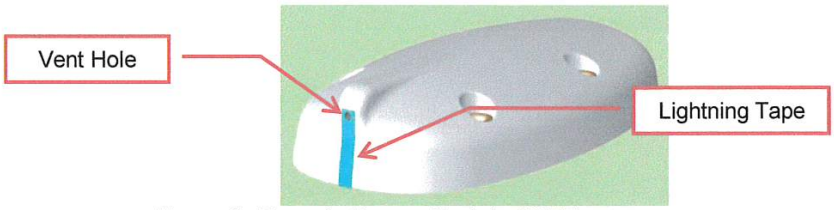

Figure 1 - Remote Sensor Module (RSM)

4.2 Before Take-Off Checks

4.2.1 EFD1000 PFD PRO, EFD1000 PFD PRO C3, EFD1000 PFD PILOT, EFD1000 PFD VFR

1. PFD ..... Configure for departure

4.2.2 EFD1000 MFD (without EBB) or EFD500 MFD

1. MFD ..... Configure for departure

4.2.3 EFD1000 MFD with EBB

If an EFD1000 MFD with EBB is installed in lieu of a backup altimeter and/or airspeed indicator (see Table 2), perform the following:

1. EBB Switch ..... NORM
2. MENU ..... Select POWER SETTINGS page
3. EXT PWR: (Aircraft Input Voltage) ..... Check > 12.3V/24.6V
4. BAT ..... Verify battery status is not shown as "FAIL"
5. EFD1000 MFD ..... Select "BATTERY"
6. EFD1000 MFD ..... Verify battery charge is above 80%
7. EFD1000 MFD ..... Select EXT PWR
8. MENU ..... Press the MENU button to return to normal operation.
9. EFD1000 MFD ..... Select REV then press XFILL. The MFD must be operated in the PFD reversion mode for takeoff.

Except as instructed in Section 3.2.2, the EBB switch should be left in the NORM position at all times, including when away from the aircraft.

© Copyright 2016 Aspen Avionics Inc.

4.2.4 EFD1000 PFD EBD Advanced or EFD1000 PFD EBD Basic

1. EBB Switch ..... NORM
2. MENU..... Select POWER SETTINGS page
3. EXT PWR: (Aircraft Input Voltage) ..... Check > 12.3V/24.6V
4. BAT ..... Verify battery status is not shown as "FAIL"
5. EFD1000 PFD EBD ..... Select "BATTERY"
6. EFD1000 PFD EBD ..... Verify battery charge is above 80%
7. EFD1000 PFD EBD ..... Select EXT PWR
8. MENU ..... Press the MENU button to return to normal operation
9. BARO ..... Set

Except as instructed in Section 3.2.2, the EBB switch should be left in the NORM position at all times, including when away from the aircraft.

4.3 Avionik Straubing APS4A Altitude Preselector

1. Altitude Alerter ..... Set as desired
2. PRESEL..... Press for ARMED

To deselect:

3. PRESEL..... Press to Disarm

4.4 S-TEC 55X Altitude Preselect and Vertical Speed Control

Except as described here, refer to the S-TEC 55X AFMS and Pilot's Guide for S-TEC 55X information.

Preflight:

When the EFD1000 PFD displays "**RDY**", perform the following steps:

1. Select the STEC55X A/P menu page on the EFD1000 PFD and change the VERT SPD CNTL: option from PFD to STEC55X.
2. Conduct the S-TEC 55X Autopilot Tests per the FAA-approved Airplane Flight Manual Supplement for the autopilot system installation.
3. Select the STEC55X A/P menu page on the EFD1000 PFD and change the VERT SPD CNTL option from STEC55X to PFD.

Operation:

To select a vertical speed, and to preselect and capture a selected altitude:

1. Vertical Speed Bug ..... Set as desired on the PFD.
2. Altitude Bug ..... Set as desired on the PFD.
3. S-TEC 55X Programmer/Computer..... Engage the VS mode. For preselected altitude, engage ALT and VS simultaneously.

© Copyright 2016 Aspen Avionics Inc.

4.5 ADS-B OUT Control

When the EFD1000 PFD displays "**UAT CTL: MENU**", perform the following steps to set the squawk or IDENT:

To set the squawk:

1. Transponder ..... Set the squawk
2. Press MENU ..... Set the squawk. Press MENU to return

To IDENT:

1. Press MENU ..... Press IDENT. Press MENU to return

4.6 Before Approach Checks

1. PFD ..... Configure for arrival

If an EFD1000 MFD with EBB is installed in lieu of a backup altimeter and/or airspeed indicator (see Table 2), perform the following:

1. EFD1000 MFD ..... Select REV then press XFILL. The MFD must be operated in the PFD reversion mode for landing.

4.7 Shutdown Checks

After conducting normal Shutdown checklist items, ensure the following:

1. EFD1000/500 Switches ..... OFF

4.8 Turning the AOA System On, Off or Auto on the PFD

To turn the AOA system On, Off or Auto on the PFD, proceed as follows:

1. Press MENU to enter the menu pages.
2. Rotate the right knob to select the GENERAL SETTINGS C menu page.
3. Press the AOA DSPL button until the label turns magenta.
4. Rotate the right knob to select ON, OFF or AUTO.
5. Push the AOA DSPL button to retain the selection.
6. Press MENU to exit the menu pages.

© Copyright 2016 Aspen Avionics Inc.

5 Performance

There is no change to the airplane performance.

© Copyright 2016 Aspen Avionics Inc.

6 Weight and Balance

See the current weight and balance documents for this aircraft.

© Copyright 2016 Aspen Avionics Inc.

7 Systems Description

The following paragraphs describe the evaluation flight display and the optional interfaces shown in Table 1.

7.1 Evolution Flight Display

The Evolution Flight Display System consists of one or more integrated Electronic Flight Display (EFD1000 or EFD500) systems. The EFD1000 system can be configured as a Primary Flight Display (PFD) or as a multi-function display (MFD). The EFD500 system can be configured as an MFD only. The EBD Basic or the EBD Advanced are Primary Flight Displays used as backup to a non-Aspen Primary Flight Display.

The following Pilot Guides should be carried in the aircraft and available to the pilot as appropriate for the equipment installed in the airplane:

a. For the EFD1000 PFD PILOT, PFD PRO, EBD Basic and EBD Advanced: Aspen Avionics document 091-00005-001, EFD1000 PFD Pilot's Guide, Revision F or subsequent revision.

b. For the EFD1000 PFD VFR: Aspen Avionics document 091-00028-001, EFD1000 VFR PFD Pilot's Guide, Revision ( ) or subsequent revision.

c. For the EFD1000 PFD PRO C3: Aspen Avionics document 091-00019-001, EFD1000 C3 Pro PFD Pilot's Guide Revision B or subsequent revision.

d. For the EFD1000 MFD or EFD500 MFD: Aspen Avionics document 091-00006-001, EFD1000/500 MFD Pilot's Guide Revision B or subsequent revision.

Go to www/aspenavionics.com/support for current Pilot Guides and Pilot Guides Errata and Addenda.

7.1.1 Internal Battery

The EFD1000 and EFD500 contain internal batteries which provide for continued operation for approximately 30 minutes (at a full charge and a shirt-sleeve environment) in the event of a complete loss of electrical power to the systems.

7.1.2 Emergency Backup Battery (EBB)

The EBB is an external rechargeable battery for the EFD1000 MFD, the EFD1000 EBD Advanced and the EFD1000 EBD Basic. This is a larger battery that will provide at least 30 minutes operation (at 80% charge) in the event of complete loss of electrical power.

7.1.3 Intercommunication

The EFD1000 PFD and the EFD1000/500 MFD intercommunicate barometric pressure and other data among these systems. The EFD1000 EBD does not intercommunicate barometric pressure with the non-Aspen Primary Flight display. It is necessary to adjust the barometric pressure directly on the Aspen EFD1000 EBD.

© Copyright 2016 Aspen Avionics Inc.

7.2 Databases

The following table provides information regarding the databases in the EFD.

Table 5 - Databases

Database Type	Includes	Update Cycle	Used In	Database Provider	Comment
Terrain	High resolution terrain data for Americas, International, or Worldwide geographic regions. Terrain depiction is limited to the region between 65° North latitude to 65° South latitude	Delivered with the EFD, updated intermittently as announced by Jeppesen	Synthetic Vision, Nav Maps and Terrain Maps	Jeppesen mail order	These databases are not to be used for navigation.
NavData	Includes Navaids, Controlled Airspace, Restricted, Prohibited and Special Use Airspace, Airports, etc.	28 day update cycle	Synthetic Vision and Nav Maps	Jeppesen JSUM©	
Cultural	Includes Roads, Rivers, Railroads, Political boundaries, Cities, etc.	28 day update cycle	Synthetic Vision and Nav Maps	Jeppesen JSUM©	
Obstacles	Includes man made obstacles greater than 200 ft. AGL. This database relies upon data reported by government agencies and may not include all obstacles due to inherent reporting and processing delays in the data. In addition, obstacle data may not be available for all regions within the data card coverage area.	28 day update cycle	Synthetic Vision and Nav Maps and Terrain maps	Jeppesen JSUM©	
Charts	AeroNav Terminal Procedures Charts	28 day update cycle	Terminal Procedures and Airport Diagrams	Seattle Avionics	

7.3 Remote Sensor Module (RSM)

The RSM provides heading information to the EFD1000 and is powered by the EFD1000. Some models have an internal GPS for emergency use that will automatically operate when the external GPS systems fail.

7.4 Traffic Display

There are several Traffic Interfaces that are available. Table 1 Installed Equipment List identifies the equipment in this aircraft.

The traffic data can be displayed on the moving map or as a dedicated view on the MFD when connected to the approved TCAS I, TAS, TIS or ADS-B external sensor. The dedicated view is titled TFC.

Traffic data provides a graphical depiction of aircraft relative to the aircraft heading. When the traffic data is not displayed on the PFD's moving map, the traffic automatically displays during a Traffic Advisory. When the dedicated traffic view is not displayed on the MFD and a Traffic Advisory occurs, a traffic popup is displayed to allow quick selection to view the Traffic Advisory.

The horizontal position reference point for each traffic image on the display is the center of the traffic image. The horizontal position reference point for the ownship on the display is the

© Copyright 2016 Aspen Avionics Inc.

intersection of the geometric centerline of the wing and the geometric centerline of the ownship symbol fuselage.

7.5 ADS-B

7.5.1 ADS-B OUT

The Aspen or FreeFlight ADS-B OUT system automatically transmits surveillance data to Air Traffic Control and other entities. The ADS-B OUT interfaces with an onboard altimeter and GPS to transmit the squawk, registration, altitude and position. When "UAT CTL: MENU" is displayed on the on the PFD, then control of the squawk and IDENT is temporarily transferred to the PFD MENU.

If the ADS-B OUT system is turned off then ATC will not receive the surveillance data.

If the transponder is turned off, the UAT control will be transferred to the Aspen Display.

7.5.2 ADS-B IN

The Aspen PFD and MFD systems can display weather and traffic information when integrated with a compatible ADS-B system.

7.6 Weather Interface

The Datalink weather data can be displayed on the moving map or as a dedicated view on the MFD when connected to the EWR50 or FIS-B external sensor. The dedicated view is titled WX.

NEXRAD consists of composite images from many radar sites that are collected and compiled. The oldest portions of the contributing NEXRAD sites could be 0 to 20 minutes older than the age depicted.

7.7 Stormscope

The Strikes data shows the electrical discharges (associated with thunderstorms) that are detected by the L3 Stormscope®.

7.8 Terminal Procedure Charts

The MFD supports a dedicated charts view. The dedicated view is titled CHARTS.

The dedicated charts view displays pre-composed terminal procedures from the Seattle Avionics Instrument Procedures Charts Database. The dedicated charts view allows the pilot to overlay the ownship on geo-reference instrument approach procedures and airport diagrams. The ownship is only available for display on the airport diagram when the aircraft is on the ground.

The ownship position is centered at the intersection of the wings and fuselage.

The Terminal Procedures Charts require a database.

Only Geo-referenced charts are eligible for ownship depiction.

7.9 NAV and Terrain Maps

The PFD and MFD both support a moving map.

The PFD moving map is integrated into the navigation display on the bottom-half of the PFD.

© Copyright 2016 Aspen Avionics Inc.

The MFD moving map is a dedicated view that displays NAVAIDs, Controlled Airspace, Restricted, Prohibited and Special Use Airspace, Airports, etc.

The terrain and obstacle data can be displayed on the moving map or as a dedicated view on the MFD. The dedicated view is titled TERR. The terrain and obstacle data is advisory only.

CAUTION:
Accurate barometric pressure is essential for accurate terrain and obstacle data.

The terrain and obstacle data is colorized information based on the aircraft's proximity to terrain and obstacles. The aircraft's proximity to terrain and obstacles is determined by computing the altitude difference between the terrain and obstacles in the database and the aircraft's baro-corrected altitude.

The MFD Nav and Terrain maps require a database. The PFD moving map does not require a database.

7.10 EA100 Autopilot AHRS

The EA100 provides pitch and roll signals information to the autopilot.

7.11 Synthetic Vision and Terrain Warning System

The PFD and MFD can both support the display of Synthetic Vision. The display of the Synthetic Vision depiction is advisory only.

The Synthetic Vision depiction is a computer-derived perspective view of the nearby terrain obstacles and airports. The Synthetic Vision depiction supports a flight path marker to display the vertical and lateral path of the aircraft based on two parameters, barometric vertical speed and GPS track. The Synthetic Vision depiction also supports a Terrain Warning System (TWS) that uses the flight path marker to present an estimated time-to-collision function for terrain and obstacles. Unless inhibited by the pilot, TWS operates even when Synthetic Vision is turned off.

The MFD Nav and Terrain maps require a database.

CAUTION:
Accurate barometric pressure is essential for accurate Synthetic Vision and Terrain Warning.

7.12 Connected Gateway

The Connected Gateway provides a means to communicate flight plan information from a portable device to the navigation system.

7.13 Radar Altitude

When installed and configured. Radar Altitude information can be presented on the PFD. When the height exceeds the Radar Altitude maximum height, the indication is suppressed. When the Radar Altitude is at or below the maximum height, the Radar Altitude is shown as a number marked RA on the PFD.

Separately, the Decision Height can be shown as an amber balloon on the PFD.

7.14 ADF Interface

When installed and configured, ADF #1, #2 or both can be shown on the needles controlled by the left and right lower buttons.

7.15 VHF Interface

When installed and configured, VLOC 1 or VLOC 2 can be selected by the lower center button.

© Copyright 2016 Aspen Avionics Inc.

7.16 GPS Interface

When installed and configured, GPS1 or GPS2 can be selected using the lower center button.

7.17 Avionik Straubing APS4A Altitude Preselector

The Altitude Preselector is a remote altitude hold function. When armed, the altitude hold will be engaged at the selected altitude.

7.18 S-TEC 55X Vertical Speed Control/Altitude Preselect

When installed and configured, the PFD provides vertical speed command and altitude preselect for the S-TEC 55X autopilot.

7.19 Autopilot Source Select

The autopilot normally is connected to the PFD. If the MFD is reverted to a PFD, then the MFD can be selected as the autopilot source.

7.20 AOA System

The Aspen AOA System is a derived AOA system, meaning it uses the air data and inertial functions in the EFD1000 to calculate the approximate AOA. It does not indicate stall warning.

The AOA system is designed to show trend toward stall and stall margin. Stall margin is the actual AOA compared to the stall AOA.

WARNING:
The AOA indications are not valid for takeoff.

There are two pointers that move together. The Upper Pointer indicates stall margin in the flaps up configuration. The Lower Pointer indicates stall margin in the full flaps down configuration.

NOTE:
There is no indication of derived AOA for intermediate flap settings.

When the airplane moves toward stall, the pointers will move from the green band into the yellow band, and eventually to the black/yellow band. Whenever the pointers are rapidly moving toward the yellow/black band, the airplane is rapidly approaching stall.

Conversely, as the airplane accelerates toward cruise speed, both pointers will move toward the blue band and will eventually park at the end of the blue band.

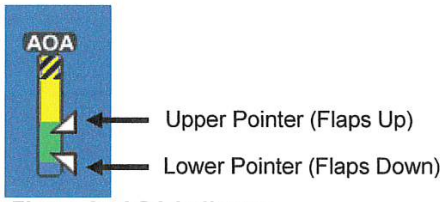

Figure 2 - AOA Indicator

© Copyright 2016 Aspen Avionics Inc.

7.20.1 AOA Display Modes

The PFD supports three AOA display modes, Auto, On and Off. The MFD supports one mode, On.

Table 6 - AOA Display Modes

Mode	Description
AUTO	From cruise, the AOA indicator fades in when the Upper Pointer trends past the green/blue transition. This minimizes the indication on the PFD until the AOA presents useful information.
ON	The AOA indicator is always displayed.
OFF	The PFD does not display the AOA indicator.

See Section 4.7 for information on how to select the modes of operation.

7.20.2 AOA Operation by Phase of Flight

The following tables describe the typical AOA indications in various phases of flight in the On and Auto modes.

Table 7 - AOA "ON "Mode

Phase of Flight	Description of the AOA indicator
Taxi	The AOA indicator is displayed with no pointers.
Takeoff	The AOA pointers fade in at about 35 KIAS. AOA indications are not valid for takeoff.
Climb	In the clean configuration, the AOA pointers will be in the green band.
Cruise	In normal cruise, the AOA pointers are parked at the bottom of the blue band.
Descent	In normal descent, the AOA pointers are parked at the bottom of the blue band.
Approach	As the airplane slows, the AOA trends from the blue band toward the green/yellow transition. When on-speed at one g and full flaps, the Lower Pointer nears the green/yellow transition.
Landing	The pointers trend toward stall during landing.
Rollout	The pointers fade out at approximately 35 KIAS.

Table 8 - AOA "AUTO" Mode

Phase of Flight	Description of the AOA indicator
Taxi	"AOA AUTO" is displayed.
Takeoff	The AOA indicator with pointers will fade in at about 35 KIAS. AOA indications are not valid for takeoff.
Climb	In the clean configuration, the AOA pointers will be in the green band.
Cruise	The AOA indicator will fade to "AOA AUTO" when the Upper Pointer parks at the end of the blue band.
Descent	"AOA AUTO" is displayed.
Approach	The AOA Indicator fades in when the Upper pointer trends above the blue band. As the airplane slows, the AOA trends toward the green/yellow transition. When on-speed at one g and full flaps, the Lower Pointer nears the green/yellow transition.
Landing	The pointers trend toward stall during landing.
Rollout	The indicator fades out at approximately 35 KIAS and the AOA AUTO message fades in.

© Copyright 2016 Aspen Avionics Inc.

7.20.3 Pointer Definition

The following table shows the pointer definitions.

Table 9 - Pointer Definition

Pointers	Meaning
Upper Pointer (Flaps Up)	The Upper Pointer indicates stall margin in the flaps up configuration.
Lower Pointer (Flaps Down)	The Lower Pointer indicates stall margin in the full flaps down configuration.

7.20.4 Color Band Definition

The color bands mean the following:

Table 10 - Color Band Definition

Color Band	Meaning
Yellow/black hash-marked band	Very little stall margin.
Yellow band	Reduced stall margin.
Green band	AOA is well above stall.
Blue band	Normal cruise, normal descent. AOA is well above stall.

© Copyright 2016 Aspen Avionics Inc.